NFPA®

22

Standard for Water Tanks for Private Fire Protection

2018

NFPA®

This File is Uploaded By

4MechEngineer.com

MECHANICAL ENGINEER

You can Follow US

Facebook/4MechEngineer

Linked-in/4MechEngineer

Instagram/4MechEngineer

YouTube/4MechEngineer

Google+/4MechEngineer

Twitter/4MechEngineer

IMPORTANT NOTICES AND DISCLAIMERS CONCERNING NFPA® STANDARDS

NOTICE AND DISCLAIMER OF LIABILITY CONCERNING THE USE OF NFPA STANDARDS

NFPA® codes, standards, recommended practices, and guides ("NFPA Standards"), of which the document contained herein is one, are developed through a consensus standards development process approved by the American National Standards Institute. This process brings together volunteers representing varied viewpoints and interests to achieve consensus on fire and other safety issues. While the NFPA administers the process and establishes rules to promote fairness in the development of consensus, it does not independently test, evaluate, or verify the accuracy of any information or the soundness of any judgments contained in NFPA Standards.

The NFPA disclaims liability for any personal injury, property, or other damages of any nature whatsoever, whether special, indirect, consequential or compensatory, directly or indirectly resulting from the publication, use of, or reliance on NFPA Standards. The NFPA also makes no guaranty or warranty as to the accuracy or completeness of any information published herein.

In issuing and making NFPA Standards available, the NFPA is not undertaking to render professional or other services for or on behalf of any person or entity. Nor is the NFPA undertaking to perform any duty owed by any person or entity to someone else. Anyone using this document should rely on his or her own independent judgment or, as appropriate, seek the advice of a competent professional in determining the exercise of reasonable care in any given circumstances.

The NFPA has no power, nor does it undertake, to police or enforce compliance with the contents of NFPA Standards. Nor does the NFPA list, certify, test, or inspect products, designs, or installations for compliance with this document. Any certification or other statement of compliance with the requirements of this document shall not be attributable to the NFPA and is solely the responsibility of the certifier or maker of the statement.

REVISION SYMBOLS IDENTIFYING CHANGES FROM THE PREVIOUS EDITION

Text revisions are shaded. A Δ before a section number indicates that words within that section were deleted and a Δ to the left of a table or figure number indicates a revision to an existing table or figure. When a chapter was heavily revised, the entire chapter is marked throughout with the Δ symbol. Where one or more sections were deleted, a • is placed between the remaining sections. Chapters, annexes, sections, figures, and tables that are new are indicated with an *N*.

Note that these indicators are a guide. Rearrangement of sections may not be captured in the markup, but users can view complete revision details in the First and Second Draft Reports located in the archived revision information section of each code at www.nfpa.org/docinfo. Any subsequent changes from the NFPA Technical Meeting, Tentative Interim Amendments, and Errata are also located there.

REMINDER: UPDATING OF NFPA STANDARDS

Users of NFPA codes, standards, recommended practices, and guides ("NFPA Standards") should be aware that NFPA Standards may be amended from time to time through the issuance of a Tentative Interim Amendment (TIA) or corrected by Errata. An official NFPA Standard at any point in time consists of the current edition of the document together with any TIAs and Errata then in effect.

To determine whether an NFPA Standard has been amended through the issuance of Tentative Interim Amendments or corrected by Errata, go to www.nfpa.org/docinfo to choose from the list of NFPA Standards or use the search feature to select the NFPA Standard number (e.g., NFPA 13). The document information page provides up-to-date document-specific information as well as postings of all existing TIAs and Errata. It also includes the option to register for an "Alert" feature to receive an automatic email notification when new updates and other information are posted regarding the document.

ISBN: 978-145591887-4 (PDF)
ISBN: 978-145591888-1 (eBook)

IMPORTANT NOTICES AND DISCLAIMERS CONCERNING NFPA® STANDARDS

ADDITIONAL NOTICES AND DISCLAIMERS

Updating of NFPA Standards

Users of NFPA codes, standards, recommended practices, and guides ("NFPA Standards") should be aware that these documents may be superseded at any time by the issuance of new editions or may be amended from time to time through the issuance of Tentative Interim Amendments or corrected by Errata. An official NFPA Standard at any point in time consists of the current edition of the document together with any Tentative Interim Amendments and any Errata then in effect. In order to determine whether a given document is the current edition and whether it has been amended through the issuance of Tentative Interim Amendments or corrected through the issuance of Errata, consult appropriate NFPA publications such as the National Fire Codes® Subscription Service, visit the NFPA website at www.nfpa.org, or contact the NFPA at the address listed below.

Interpretations of NFPA Standards

A statement, written or oral, that is not processed in accordance with Section 6 of the Regulations Governing the Development of NFPA Standards shall not be considered the official position of NFPA or any of its Committees and shall not be considered to be, nor be relied upon as, a Formal Interpretation.

Patents

The NFPA does not take any position with respect to the validity of any patent rights referenced in, related to, or asserted in connection with an NFPA Standard. The users of NFPA Standards bear the sole responsibility for determining the validity of any such patent rights, as well as the risk of infringement of such rights, and the NFPA disclaims liability for the infringement of any patent resulting from the use of or reliance on NFPA Standards.

NFPA adheres to the policy of the American National Standards Institute (ANSI) regarding the inclusion of patents in American National Standards ("the ANSI Patent Policy"), and hereby gives the following notice pursuant to that policy:

NOTICE: The user's attention is called to the possibility that compliance with an NFPA Standard may require use of an invention covered by patent rights. NFPA takes no position as to the validity of any such patent rights or as to whether such patent rights constitute or include essential patent claims under the ANSI Patent Policy. If, in connection with the ANSI Patent Policy, a patent holder has filed a statement of willingness to grant licenses under these rights on reasonable and nondiscriminatory terms and conditions to applicants desiring to obtain such a license, copies of such filed statements can be obtained, on request, from NFPA. For further information, contact the NFPA at the address listed below.

Law and Regulations

Users of NFPA Standards should consult applicable federal, state, and local laws and regulations. NFPA does not, by the publication of its codes, standards, recommended practices, and guides, intend to urge action that is not in compliance with applicable laws, and these documents may not be construed as doing so.

Copyrights

NFPA Standards are copyrighted. They are made available for a wide variety of both public and private uses. These include both use, by reference, in laws and regulations, and use in private self-regulation, standardization, and the promotion of safe practices and methods. By making these documents available for use and adoption by public authorities and private users, the NFPA does not waive any rights in copyright to these documents.

Use of NFPA Standards for regulatory purposes should be accomplished through adoption by reference. The term "adoption by reference" means the citing of title, edition, and publishing information only. Any deletions, additions, and changes desired by the adopting authority should be noted separately in the adopting instrument. In order to assist NFPA in following the uses made of its documents, adopting authorities are requested to notify the NFPA (Attention: Secretary, Standards Council) in writing of such use. For technical assistance and questions concerning adoption of NFPA Standards, contact NFPA at the address below.

For Further Information

All questions or other communications relating to NFPA Standards and all requests for information on NFPA procedures governing its codes and standards development process, including information on the procedures for requesting Formal Interpretations, for proposing Tentative Interim Amendments, and for proposing revisions to NFPA standards during regular revision cycles, should be sent to NFPA headquarters, addressed to the attention of the Secretary, Standards Council, NFPA, 1 Batterymarch Park, P.O. Box 9101, Quincy, MA 02269-9101; email: stds_admin@nfpa.org.

For more information about NFPA, visit the NFPA website at www.nfpa.org. All NFPA codes and standards can be viewed at no cost at www.nfpa.org/docinfo.

Copyright © 2017 National Fire Protection Association®. All Rights Reserved.

NFPA® 22

Standard for

Water Tanks for Private Fire Protection

2018 Edition

This edition of NFPA 22, *Standard for Water Tanks for Private Fire Protection,* was prepared by the Technical Committee on Water Tanks. It was issued by the Standards Council on November 10, 2017, with an effective date of November 30, 2017, and supersedes all previous editions.

This edition of NFPA 22 was approved as an American National Standard on November 30, 2017.

Origin and Development of NFPA 22

In 1909, the NFPA Committee on Gravity Tanks developed the *Standard on Gravity Tanks*. Amendments were considered in 1912 and 1913, and the standard was adopted in 1914. Revised or amended editions were adopted in 1915, 1917, 1918, 1919, 1922, 1926, 1928, 1930, 1931, 1933, 1936, 1941, 1949, and 1950.

The name of the committee was changed to the Committee on Water Tanks, and its recommendations resulted in changes adopted in 1957, 1958, 1962, 1965, 1967, 1970, 1971, 1974, 1976, 1978, 1981, and 1987.

Tanks other than gravity tanks (which, at that time, included concrete reservoirs) and valve pits were first covered in 1913, pressure tanks (formerly covered by *Standards for Sprinkler Systems*) were covered in 1915, and tank heating was covered in 1922. The standard title has been periodically amended to reflect the expanded scope of the standard.

The 1993 edition provided new, environmentally friendly requirements for tank-coating systems. Two new chapters were included to cover the design and erection of bolted steel tanks and concrete tanks. Information on fiberglass tanks also was included. These changes, along with other editorial changes, reflected the current information for water storage tank design.

The 1996 edition of NFPA 22 consolidated tank care and maintenance information within a single chapter. Further revisions addressed the corrosion resistance of certain tank components, access into tanks, the monitoring of internal conditions, and the structural stresses to which tanks are subjected. The figures in Appendix B were revised to reflect current practices. Editorial changes were also made.

The 1998 edition further addressed environmental issues. All inspection, testing, and maintenance requirements were removed and added to the appropriate chapter of the 1998 edition of NFPA 25, *Standard for the Inspection, Testing, and Maintenance of Water-Based Fire Protection Systems.*

The 2003 edition was changed to conform to the *Manual of Style for NFPA Technical Committee Documents*, 2000 edition. Referenced publications were updated.

The 2008 edition recognized the use of fiberglass-reinforced plastic (FRP) tanks with a new Chapter 11. Acceptance test requirements were consolidated into a new Chapter 17, "Acceptance Test Requirements," to improve user-friendliness.

The 2013 edition added sizing requirements for break tanks in Chapter 4 and sizing procedures for pressure tanks in the Chapter 7 annex material. The term *suction tank* was defined, and the requirements for anti-vortex plates were revised. Table 5.4 was updated to align with current industry standards.

NFPA and National Fire Protection Association are registered trademarks of the National Fire Protection Association, Quincy, Massachusetts 02169.

The 2018 edition substantially modified Chapters 5 and 6. In Chapter 5 all duplicate requirements to AWWA D100 have been removed and reference to AWWA D100 has been made; requirements specific to fire protection remain in Chapter 5. In Chapter 6 all duplicate requirements to AWWA D103 have been removed and reference to AWWA D103 made; requirements specific to fire protection remain in Chapter 6. Requirements for check valves in the discharge pipe of a suction tank have been clarified in Chapter 14, and tank repair requirements have been modified requiring the impairment procedures of NFPA 25 to be followed. Chapter 16 has added new criteria for electric immersion heaters, and the lowest one-day mean temperature map has been removed in lieu of using calculations to determine tank heating needs.

Technical Committee on Water Tanks

Robert M. Gagnon, *Chair*
Gagnon Engineering, MD [SE]

Kevin P. Bellew, Sprinkler Fitters & Apprentices Local 696, NJ [L]
Rep. United Assn. of Journeymen & Apprentices of the Plumbing & Pipe Fitting Industry

Babanna Biradar, Bechtel India Pvt Ltd, India [SE]

John D. Campbell, Global Fire Protection Group, LLC, MO [SE]

Christopher Culp, Henderson Engineers, Inc., KS [SE]

Sullivan D. Curran, Fiberglass Tank & Pipe Institute, TX [M]
Rep. Fiberglass Tank & Pipe Institute

Douglas W. Fisher, Fisher Engineering, Inc., GA [SE]

Joseph R. Fowler, S.A. Comunale Company, Inc., OH [IM]

Greg Garber, Pittsburg Tank & Tower Inc., VA [M]

Andrew M. Henning, CAL FIRE, Office of the State Fire Marshal, CA [E]

Jack Hillman, Hall-Woolford Tank Company, Inc., PA [M]

David Hochhauser, Isseks Brothers Incorporated, NY [IM]

Kevin J. Kelly, Victaulic, PA [IM]
Rep. National Fire Sprinkler Association

Todd M. Kidd, Liberty Mutual Insurance Companies, NC [I]

Nicholas A. Legatos, Preload Incorporated, NY [M]
Rep. American Concrete Institute

Keith McGuire, CST Storage, KS [M]

John M. Mitchard, Nuclear Service Organization, DE [I]

Bob D. Morgan, Fort Worth Fire Department, TX [E]

Thomas William Noble, American Fire Sprinkler Association, TX [IM]

Leonard J. Ramo, Telgian Corporation, GA [SE]

Andrew Rosenwach, Rosenwach Tank Company, Inc., NY [M]
Rep. National Wood Tank Institute

Daniel Sanchez, City of Los Angeles, CA [E]

Mark A. Sornsin, Summit Companies, ND [IM]

Gregory R. Stein, Tank Industry Consultants, IN [SE]

Owen Stevens, Fiber Tech Corporation, VA [M]

Alternates

Roland A. Asp, National Fire Sprinkler Association, Inc., MD [IM]
(Alt. to Kevin J. Kelly)

Andrew J. Brady, Nuclear Service Organization, DE [I]
(Alt. to John M. Mitchard)

Patrick Jon Brown, Tank Industry Consultants, IN[SE]
(Alt. to Gregory R. Stein)

Skip Donnell, Liberty Mutual Insurance Company, IN[I]
(Alt. to Todd M. Kidd)

Christine Fowler, CAL FIRE, Office of the State Fire Marshal, CA [E]
(Alt. to Andrew M. Henning)

Jeremy W. John, Fisher Engineering, Inc., GA [SE]
(Alt. to Douglas W. Fisher)

Gary Koenig, Sprinkler Fitters Local Union 696, NJ [L]
(Alt. to Kevin P. Bellew)

R. Greg Patrick, Treasure Valley Fire Protection, Inc., ID [IM]
Voting Alternate

John J. Sweeney, Smith Engineered Storage Products Company, IL [M]
(Alt. to Keith McGuire)

Daniel S. Vandergriff, Telgian Corporation, MO [SE]
(Alt. to Leonard J. Ramo)

Janna E. Shapiro, NFPA Staff Liaison

This list represents the membership at the time the Committee was balloted on the final text of this edition. Since that time, changes in the membership may have occurred. A key to classifications is found at the back of the document.

NOTE: Membership on a committee shall not in and of itself constitute an endorsement of the Association or any document developed by the committee on which the member serves.

Committee Scope: This Committee shall have primary responsibility for documents on the design, construction, installation, and maintenance of tanks and accessory equipment supplying water for fire extinguishment, including gravity and pressure tanks, towers and foundations, pipe connections and fittings, valve enclosures and frost protection, and tank heating equipment.

Contents

Chapter 1 Introduction **22–** 6
1.1 Scope. **22–** 6
1.2 Purpose. **22–** 6
1.3 Retroactivity. **22–** 6
1.4 Equivalency. **22–** 6
1.5 Types of Tanks. **22–** 6
1.6 Units. **22–** 6

Chapter 2 Referenced Publications **22–** 7
2.1 General. **22–** 7
2.2 NFPA Publications. **22–** 7
2.3 Other Publications. **22–** 7
2.4 References for Extracts in Mandatory Sections. (Reserved) **22–** 8

Chapter 3 Definitions **22–** 8
3.1 General. **22–** 8
3.2 NFPA Official Definitions. **22–** 8
3.3 General Definitions. **22–** 9

Chapter 4 General Information **22–** 9
4.1 Capacity and Elevation. **22–** 9
4.2 Water Sources. **22–** 9
4.3 Location of Tanks. **22–** 9
4.4 Tank Materials. **22–** 9
4.5 Workmanship. **22–** 10
4.6 Plans. **22–** 10
4.7 Tank Contractor Responsibility. **22–** 10
4.8 Attachments to Tank Structures. **22–** 10
4.9 Lightning Protection. **22–** 10
4.10 Strength. **22–** 10
4.11 National Standards. **22–** 10
4.12 Loads. **22–** 10
4.13 Welding. **22–** 11
4.14 Roofs. **22–** 11
4.15 Roof Vent. **22–** 11
4.16 Test Reports. **22–** 11

Chapter 5 Welded-Carbon Steel and Composite Concrete and Carbon Steel Gravity Tanks and Suction Tanks **22–** 12
5.1 General. **22–** 12
5.2 Materials. **22–** 12
5.3 Preventing Ice Damage. **22–** 12
5.4 Corrosion Protection for Bottom Plates on Soil or Concrete. **22–** 12
5.5 Painting Inaccessible Areas. **22–** 12
5.6 Painting and Corrosion Protection. **22–** 12
5.7 Painting Application. **22–** 12
5.8 Heavy Metals. **22–** 12

Chapter 6 Factory-Coated, Bolted Carbon Steel Tanks **22–** 12
6.1 General. **22–** 12
6.2 Materials, Fabrication, and Installation. **22–** 13
6.3 Corrosion Protection. **22–** 13
6.4 Structural Shapes. **22–** 13

Chapter 7 Pressure Tanks **22–** 13
7.1 General. **22–** 13
7.2 Pipe Connections and Fittings. **22–** 14

Chapter 8 Wood Gravity Tanks and Suction Tanks **22–** 15
8.1 General. **22–** 15
8.2 Material. **22–** 16
8.3 Loads. **22–** 16
8.4 Unit Stresses. **22–** 16
8.5 Details of Design. **22–** 17
8.6 Workmanship. **22–** 18
8.7 Accessories. **22–** 18

Chapter 9 Embankment-Supported Coated Fabric Suction Tanks **22–** 20
9.1 General. **22–** 20
9.2 Standard Capacities. **22–** 20
9.3 Materials. **22–** 20
9.4 Embankment Preparation and Tank Installation Procedure. **22–** 20
9.5 Tank Sump and Support for Bottom Fittings. **22–** 22
9.6 Pipe Connections and Fittings. **22–** 22

Chapter 10 Concrete Gravity Tanks and Suction Tanks .. **22–** 22
10.1 General. **22–** 22
10.2 Prestressed Tanks. **22–** 22
10.3 Standard Capacities. **22–** 22
10.4 Earthquake Load. **22–** 22
10.5 Wall Treatments. **22–** 22

Chapter 11 Fiberglass-Reinforced Plastic Tanks **22–** 22
11.1 General. **22–** 22
11.2 Application. **22–** 22
11.3 Tank Specification. **22–** 22
11.4 Monolithic Tanks. **22–** 22
11.5 Protection of Buried Tanks. **22–** 23
11.6 Protection of Aboveground Tanks **22–** 23
11.7 Tank Connections. **22–** 23

Chapter 12 Tank and Tower Foundations in the Ground **22–** 23
12.1 Concrete Specifications. **22–** 23
12.2 Suction Tank Foundations. **22–** 23
12.3 Foundation Piers for Elevated Tanks. **22–** 24
12.4 Anchorage. **22–** 24
12.5 Grouting. **22–** 24
12.6 Soil-Bearing Pressures. **22–** 24

Chapter 13 Steel Tank Towers **22–** 25
13.1 General. **22–** 25
13.2 Materials. **22–** 25
13.3 Loads. **22–** 25
13.4 Unit Stresses. **22–** 26
13.5 Details of Design. **22–** 28
13.6 Workmanship. **22–** 30
13.7 Accessories. **22–** 31

Chapter 14 Pipe Connections and Fittings **22–** 32
14.1 General Information. **22–** 32
14.2 Discharge Pipe. **22–** 33
14.3 Expansion Joint. **22–** 35
14.4 Filling. **22–** 35
14.5 Break Tanks. **22–** 36
14.6 Overflow. **22–** 36
14.7 Clean-Out and Drain. **22–** 37
14.8 Connections for Other Than Fire Protection. **22–** 37
14.9 Sensors. **22–** 37

Chapter 15 Valve Enclosures and Frost Protection **22–** 37
15.1 Valve Pit or House and Heater House. **22–** 37
15.2 Frostproof Casing. **22–** 39

Chapter 16 Tank Heating **22–** 40
16.1 General. **22–** 40
16.2 Heating Requirements. **22–** 44
16.3 Heating Systems. **22–** 45
16.4 Tank Insulation. **22–** 49

16.5 Heating for Embankment-Supported Coated Fabric Suction Tanks. **22–** 49

Chapter 17 Acceptance Test Requirements **22–** 49
17.1 Inspection of Completed Equipment. **22–** 49
17.2 Testing. **22–** 49
17.3 Welded Steel Tanks. **22–** 49
17.4 Bolted Steel Tanks. **22–** 50
17.5 Pressure Tanks. **22–** 50
17.6 Embankment-Supported Coated Fabric Tanks. **22–** 50
17.7 Concrete Tanks. **22–** 50
17.8 Wood Tanks. **22–** 50
17.9 Fiberglass-Reinforced Plastic Tanks — Hydrostatic Test. **22–** 50
17.10 Disposal of Test Water. **22–** 50
17.11 Anti-Vortex Plate Inspection. **22–** 50

Chapter 18 Inspection, Testing, and Maintenance of Water Tanks **22–** 50
18.1 General. **22–** 50

Annex A Explanatory Material **22–** 50

Annex B Typical Installations **22–** 63

Annex C Informational References **22–** 81

Index **22–** 82

NFPA 22

Standard for

Water Tanks for Private Fire Protection

2018 Edition

IMPORTANT NOTE: This NFPA document is made available for use subject to important notices and legal disclaimers. These notices and disclaimers appear in all publications containing this document and may be found under the heading "Important Notices and Disclaimers Concerning NFPA Standards." They can also be viewed at www.nfpa.org/disclaimers or obtained on request from NFPA.

UPDATES, ALERTS, AND FUTURE EDITIONS: New editions of NFPA codes, standards, recommended practices, and guides (i.e., NFPA Standards) are released on scheduled revision cycles. This edition may be superseded by a later one, or it may be amended outside of its scheduled revision cycle through the issuance of Tentative Interim Amendments (TIAs). An official NFPA Standard at any point in time consists of the current edition of the document, together with all TIAs and Errata in effect. To verify that this document is the current edition or to determine if it has been amended by TIAs or Errata, please consult the National Fire Codes® Subscription Service or the "List of NFPA Codes & Standards" at www.nfpa.org/docinfo. In addition to TIAs and Errata, the document information pages also include the option to sign up for alerts for individual documents and to be involved in the development of the next edition.

NOTICE: An asterisk (*) following the number or letter designating a paragraph indicates that explanatory material on the paragraph can be found in Annex A.

A reference in brackets [ ] following a section or paragraph indicates material that has been extracted from another NFPA document. As an aid to the user, the complete title and edition of the source documents for extracts in mandatory sections of the document are given in Chapter 2 and those for extracts in informational sections are given in Annex C. Extracted text may be edited for consistency and style and may include the revision of internal paragraph references and other references as appropriate. Requests for interpretations or revisions of extracted text shall be sent to the technical committee responsible for the source document.

Information on referenced publications can be found in Chapter 2 and Annex C.

Chapter 1 Introduction

1.1 Scope. This standard provides the minimum requirements for the design, construction, installation, and maintenance of tanks and accessory equipment that supply water for private fire protection, including the following:

(1) Gravity tanks, suction tanks, pressure tanks, and embankment-supported coated fabric suction tanks
(2) Towers
(3) Foundations
(4) Pipe connections and fittings
(5) Valve enclosures
(6) Tank filling
(7) Protection against freezing

1.2 Purpose. The purpose of this standard is to provide a basis for the design, construction, operation, and maintenance of water tanks for private fire protection.

1.3 Retroactivity. The provisions of this standard reflect a consensus of what is necessary to provide an acceptable degree of protection from the hazards addressed in this standard at the time the standard was issued.

1.3.1 Unless otherwise specified, the provisions of this standard shall not apply to facilities, equipment, structures, or installations that existed or were approved for construction or installation prior to the effective date of the standard. Where specified, the provisions of this standard shall be retroactive.

1.3.2 In those cases where the authority having jurisdiction determines that the existing situation presents an unacceptable degree of risk, the authority having jurisdiction shall be permitted to apply retroactively any portions of this standard deemed appropriate.

1.3.3 The retroactive requirements of this standard shall be permitted to be modified if their application clearly would be impractical in the judgment of the authority having jurisdiction, and only where it is clearly evident that a reasonable degree of safety is provided.

1.4 Equivalency. Nothing in this standard is intended to prevent the use of systems, methods, or devices of equivalent or superior quality, strength, fire resistance, effectiveness, durability, and safety over those prescribed by this standard.

1.4.1 Technical documentation shall be submitted to the authority having jurisdiction to demonstrate equivalency.

1.4.2 The system, method, or device shall be approved for the intended purpose by the authority having jurisdiction.

1.5 Types of Tanks. This standard addresses elevated tanks on towers or building structures, water storage tanks that are at grade or below grade, and pressure tanks.

1.5.1 Bladder Tanks Not Within NFPA 22 Scope. The following types of bladder tanks shall not be required to meet NFPA 22:

(1) Listed bladder tanks used as surge suppressors on the discharge side of fire pumps installed in accordance with NFPA 20
(2) Listed bladder tanks used as expansion tanks for antifreeze sprinkler systems installed in accordance with NFPA 13
(3) Bladder tanks used as foam concentrate tanks installed in accordance with NFPA 16 or NFPA 11

1.5.2 Bladder Tanks Within the Scope of NFPA 22. Bladder tanks shall be permitted to be a part of the water supply for a fire protection system when they meet the requirements for pressure tanks of this standard.

1.6 Units.

1.6.1 Metric units of measurement in this standard are in accordance with the modernized metric system known as the International System of Units (SI). The bar unit, which is outside of but recognized by SI, is commonly used in international fire protection. Metric units and their conversion factors are shown in Table 1.6.1.

1.6.2 If a value for measurement in this standard is followed by an equivalent value that is expressed in other units, the first stated value shall be regarded as the requirement. A given equivalent value could be approximate.

Table 1.6.1 Metric Unit Conversion Factors

Name of Unit	Unit Symbol	Conversion Factor
bar	bar	1 psi = 0.0689 bar
bar	bar	1 bar = 10^5 Pa

Note: For additional conversions and information, see IEEE/ASTM SI 10.

1.6.3 SI units in this standard have been converted by multiplying the number of units by the conversion factor and then rounding the result to the appropriate number of significant digits.

1.6.4 Where sizes for pipe, sheet and plate steel, and wire gages are indicated, they are noted in trade sizes and not by hard conversions.

Chapter 2 Referenced Publications

2.1 General. The documents or portions thereof listed in this chapter are referenced within this standard and shall be considered part of the requirements of this document.

2.2 NFPA Publications. National Fire Protection Association, 1 Batterymarch Park, Quincy, MA 02169-7471.

NFPA 11, *Standard for Low-, Medium-, and High-Expansion Foam,* 2016 edition.

NFPA 13, *Standard for the Installation of Sprinkler Systems,* 2016 edition.

NFPA 14, *Standard for the Installation of Standpipe and Hose Systems,* 2016 edition.

NFPA 15, *Standard for Water Spray Fixed Systems for Fire Protection,* 2017 edition.

NFPA 16, *Standard for the Installation of Foam-Water Sprinkler and Foam-Water Spray Systems,* 2015 edition.

NFPA 20, *Standard for the Installation of Stationary Pumps for Fire Protection,* 2016 edition.

NFPA 24, *Standard for the Installation of Private Fire Service Mains and Their Appurtenances,* 2016 edition.

NFPA 25, *Standard for the Inspection, Testing, and Maintenance of Water-Based Fire Protection Systems,* 2017 edition.

NFPA 70®, National Electrical Code®, 2017 edition.

NFPA 72®, National Fire Alarm and Signaling Code, 2016 edition.

NFPA 241, *Standard for Safeguarding Construction, Alteration, and Demolition Operations,* 2013 edition.

NFPA 780, *Standard for the Installation of Lightning Protection Systems,* 2017 edition.

2.3 Other Publications.

2.3.1 ACI Publications. American Concrete Institute, 38800 Country Club Drive, Farmington Hills, MI 48331-3439.

ACI 318, *Building Code Requirements for Structural Concrete and Commentary*, 2014.

ACI 350R, *Code Requirements for Environmental Engineering Concrete Structures*, 2006.

•

N **2.3.2 AISC Publications.** American Institute of Steel Construction, 103 East Randolph Street, Suite 2000, Chicago, IL 60601.

ANSI/AISC 360, *Specification for Structural Steel Buildings*, 2016.

2.3.3 API Publications. American Petroleum Institute, 1220 L Street, NW, Washington, DC 20005-4070.

API SPEC 5L, *Specification for CRA Line Pipe*, 4th edition, 2015.

2.3.4 ASHRAE Publications. ASHRAE Inc., 1791 Tullie Circle, NE, Atlanta, GA 30329-2305.

ASHRAE *Handbook — Fundamentals*, 2013.

Δ **2.3.5 ASME Publications.** American Society of Mechanical Engineers, Two Park Avenue, New York, NY 10016-5990.

Boiler and Pressure Vessel Code, "Rules for the Construction of Unfired Pressure Vessels," 2015.

2.3.6 ASTM Publications. ASTM International, 100 Barr Harbor Drive, P.O. Box C700, West Conshohocken, PA 19428-2959.

ASTM A36/A36M, *Standard Specification for Carbon Structural Steel* , 2014.

ASTM A53/A53M, *Standard Specification for Pipe, Steel, Black and Hot-Dipped, Zinc-Coated, Welded and Seamless*, 2012.

ASTM A106/A106M, *Standard Specification for Seamless Carbon Steel Pipe for High-Temperature Service*, Rev. A, 2015.

ASTM A108, *Standard Specification for Steel Bars, Carbon, Cold-Finished, Standard Quality*, 2013.

ASTM A131/A131M, *Standard Specification for Structural Steel for Ships*, 2014.

ASTM A139/A139M, *Standard Specification for Electric-Fusion (Arc)-Welded Steel Pipe (NPS 4 and over)*, 2016.

ASTM A283/A283M, *Standard Specification for Low- and Intermediate-Tensile Strength Carbon Steel Plates*, Rev. A, 2013.

ASTM A285/A285M, *Standard Specification for Pressure Vessel Plates, Carbon Steel, Low- and Intermediate-Tensile Strength*, 2012.

ASTM A307, *Standard Specification for Carbon Steel Bolts and Studs, 60,000 psi Tensile Strength*, 2014.

ASTM A502, *Standard Specification for Steel Structural Rivets*, 2015.

ASTM A516/A516M, *Standard Specification for Pressure Vessel Plates, Carbon Steel, for Moderate- and Lower-Temperature Service*, 2015.

ASTM A675/A675M, *Standard Specification for Steel Bars, Carbon, Hot-Wrought, Special Quality, Mechanical Properties*, Rev. A, 2014.

ASTM A992/A992M, *Standard Specification for Steel for Structural Shapes for Use in Building Framing*, 2015.

ASTM C578, *Standard Specification for Rigid, Cellular Polystyrene Thermal Insulation*, 2015b.

ASTM D751, *Standard Test Methods for Coated Fabrics*, 2011.

ASTM D1183, *Standard Test Methods for Resistance of Adhesives to Cyclic Laboratory Aging Conditions*, 2011.

ASTM D1751, *Standard Specification for Preformed Expansion Joint Filler for Concrete Paving and Structural Construction (Nonextruding and Resilient Bituminous Types)*, 2004 (2013)e1.

ASTM D2261, *Standard Test Method for Tearing Strength of Fabrics by the Tongue (Single Rip) Procedure (Constant-Rate-of-Extension Tensile Testing Machine)*, 2013.

2.3.7 AWPA Publications. American Wood Protection Association, P.O. Box 361784, Birmingham, AL 35236-1784.

Standard Specifications of the American Wood Preservers Association by the Empty-Cell Process, July 1, 2011.

2.3.8 AWS Publications. American Welding Society, 8669 NW 36 Street, #130, Miami, FL 33166-6672.

AWS D1.1/D1.1M, *Structural Welding Code — Steel*, 2015.

Δ **2.3.9 AWWA Publications.** American Water Works Association, 6666 West Quincy Avenue, Denver, CO 80235.

AWWA D100, *Welded Carbon Steel Tanks for Water Storage*, 2011.

AWWA D102, *Coating Steel Water-Storage Tanks*, 2014.

AWWA D103, *Factory-Coated Bolted Carbon Steel Tanks for Water Storage*, 2009 including Addendum D103a-14, 2014.

AWWA D104, *Automatically Controlled, Impressed-Current Cathodic Protection for the Interior Submerged Surfaces of Steel Water Storage Tanks*, 2011.

AWWA D106, *Sacrificial Anode Cathodic Protection Systems for the Interior Submerged Surfaces of Steel Water Storage Tanks*, 2016.

AWWA D107, *Composite Elevated Tanks for Water Storage*, 2016.

AWWA D108, *Aluminum Dome Roofs for Water Storage Facilities*, 2010.

AWWA D110, *Wire- and Strand-Wound, Circular, Prestressed Concrete Water Tanks*, 2013.

AWWA D115, *Tendon-Prestressed Concrete Water Tanks*, 2006.

AWWA D120, *Thermosetting Fiberglass-Reinforced Plastic Tanks*, 2009.

AWWA D121, *Bolted Aboveground Thermosetting Fiberglass-Reinforced Plastic Panel-Type Tanks for Water Storage*, 2012.

N **2.3.10 IEEE Publications.** IEEE, 3 Park Avenue, 17th Floor, New York, NY 10016-5997.

IEEE/ASTM SI 10, *American National Standard for Metric Practice*, 2010.

2.3.11 NWTI Publications. National Wood Tank Institute, 5500 N. Water St., P.O. Box 2755, Philadelphia, PA 19120.

NWTI Bulletin S82, *Specifications for Tanks and Pipes*, 1982.

2.3.12 SSPC Publications. Society for Protective Coatings, 40 24th Street, 6th Floor, Pittsburgh, PA 15222-4656.

SSPC Systems and Specifications Steel Structures Painting Manual, Volume 2, Chapter 5, 2011.

SSPC SP 6, *Joint Surface Preparation Standard Commercial Blast Cleaning*, 2007.

SSPC SP 8, *Pickling*, 2004.

SSPC SP 10, *Joint Surface Preparation Standard Near-White Blast Cleaning*, 2007.

2.3.13 U.S. Government Publications. U.S. Government Publishing Office, 732 North Capitol Street, NW, Washington, DC 20401-0001.

Title 29, Code of Federal Regulations, Part 1910 (OSHA).

Federal Standard 191 Method. Textile Test Methods, 1978.

Federal Test Method Standard 601, Rubber: Sampling and Testing, 1955.

MIL-DTL-6396F, Detail Specification: Tanks, Fuel, Oil, Cooling Fluids, Internal, Removable Non-self-sealing, 28 Jul 2008.

2.3.14 Other Publications.

Merriam-Webster's Collegiate Dictionary, 11th edition, Merriam-Webster, Inc., Springfield, MA, 2003.

2.4 References for Extracts in Mandatory Sections. (Reserved)

Chapter 3 Definitions

3.1 General. The definitions contained in this chapter shall apply to the terms used in this standard. Where terms are not defined in this chapter or within another chapter, they shall be defined using their ordinarily accepted meanings within the context in which they are used. *Merriam-Webster's Collegiate Dictionary,* 11th edition, shall be the source for the ordinarily accepted meaning.

3.2 NFPA Official Definitions.

3.2.1* Approved. Acceptable to the authority having jurisdiction.

3.2.2* Authority Having Jurisdiction (AHJ). An organization, office, or individual responsible for enforcing the requirements of a code or standard, or for approving equipment, materials, an installation, or a procedure.

3.2.3 Labeled. Equipment or materials to which has been attached a label, symbol, or other identifying mark of an organization that is acceptable to the authority having jurisdiction and concerned with product evaluation, that maintains periodic inspection of production of labeled equipment or materials, and by whose labeling the manufacturer indicates compliance with appropriate standards or performance in a specified manner.

3.2.4* Listed. Equipment, materials, or services included in a list published by an organization that is acceptable to the authority having jurisdiction and concerned with evaluation of products or services, that maintains periodic inspection of production of listed equipment or materials or periodic evaluation of services, and whose listing states that either the equipment, material, or service meets appropriate designated standards or has been tested and found suitable for a specified purpose.

3.2.5 Shall. Indicates a mandatory requirement.

3.2.6 Should. Indicates a recommendation or that which is advised but not required.

3.2.7 Standard. An NFPA Standard, the main text of which contains only mandatory provisions using the word "shall" to indicate requirements and that is in a form generally suitable for mandatory reference by another standard or code or for adoption into law. Nonmandatory provisions are not to be considered a part of the requirements of a standard and shall be located in an appendix, annex, footnote, informational note, or other means as permitted in the NFPA Manuals of Style. When used in a generic sense, such as in the phrase "standards development process" or "standards development activities," the term "standards" includes all NFPA Standards, including Codes, Standards, Recommended Practices, and Guides.

3.3 General Definitions.

3.3.1 Holiday. A discontinuity in the coating system that includes, but is not limited to, voids, cracks, pinholes, or scratches.

N **3.3.2 Tank.**

N **3.3.2.1*** ***Bladder Tank.*** A type of pressure tank containing air and water separated by a flexible membrane (bladder).

3.3.2.2 ***Break Tank.*** A tank providing suction to a fire pump whose capacity is less than the fire protection demand (flow rate times flow duration).

N **3.3.2.3*** ***Gravity Tank.*** A storage tank that uses elevation (head) as a source of pressure.

N **3.3.2.4*** ***Pressure Tank.*** A tank that uses air or some other gas under pressure as a means of expelling its contents.

3.3.2.5 ***Suction Tank.*** A tank that provides water to a fire pump for which a minimal amount of head pressure is provided.

3.3.3* Tank Riser. A large diameter shaft that surrounds and encloses the piping below an elevated gravity tank to provide a measure of insulation and protection.

Chapter 4 General Information

4.1 Capacity and Elevation.

4.1.1* The size and elevation of tanks shall be determined by the required fire flow and duration for the attached fire protection system(s) and the pressures required.

4.1.2 Standard sizes of tanks shall be as specified in 5.1.3, 6.1.2, 8.1.3, and Sections 9.2 and 10.3.

N **4.1.3** Tanks other than standard size shall be permitted.

4.1.4* For suction tanks, the net capacity shall be the number of U.S. gallons (cubic meters) between the inlet of the overflow and the level of the vortex plate.

N **4.1.5** For all tanks other than suction tanks, the net capacity shall be the number of U.S gallons (cubic meters) between the inlet of the overflow and the discharge outlet.

Δ **4.1.6** A tank shall be sized so that the stored supply plus reliable automatic refill shall meet the system demand for the design duration.

4.1.7 A break tank shall be sized for a minimum duration of 15 minutes with the fire pump operating at 150 percent of rated capacity.

4.2 Water Sources.

4.2.1* The adequacy and dependability of the water source for filling the tank are of primary importance and shall be fully determined, with due allowance for its reliability in the future.

4.2.1.1 Any source of water that is adequate in quality, quantity, pressure, and reliability to fill the tank in accordance with this standard shall be permitted.

4.2.1.2 Where the water supply from a public service main is not adequate in quality, quantity, or pressure, an alternative water source shall be provided.

4.2.1.3 The adequacy of the water supply shall be determined and evaluated prior to the specification and installation of the tank.

N **4.2.1.4** The water supply shall be capable of filling the minimum required fire protection volume within the tank in a maximum of 8 hours.

4.3 Location of Tanks.

4.3.1 The location of tanks shall be such that the tank and structure are protected from fire exposure in accordance with 4.3.1.1 through 4.3.1.5.

4.3.1.1 If lack of yard room makes this impracticable, the exposed steel work shall be suitably fireproofed or shall be protected by open sprinklers *(see A.13.1.1)*.

4.3.1.2 Fireproofing, where necessary, shall be provided for steelwork supporting tanks within 20 ft (6.1 m) of exposures, combustible buildings or windows, and doors from which fire might issue.

4.3.1.3 Where used for supports near combustible construction or occupancy inside the building, steel or iron shall be fireproofed 6 ft (1.8 m) above combustible roof coverings, and within 20 ft (6.1 m) of windows and doors from which fire might issue.

4.3.1.4 Steel beams or braces that join two building columns that support a tank structure shall also be suitably fireproofed where near combustible construction or occupancy.

4.3.1.5 Interior timber shall not be used to support or brace tank structures.

4.3.2 Fireproofing, where required, shall have a fire resistance rating of not less than 2 hours.

4.3.3 Foundations or footings shall furnish adequate support and anchorage for the tower.

4.3.4 If the tank or supporting trestle is to be placed on a building, the building shall be designed and built to carry the maximum loads.

4.4 Tank Materials.

4.4.1 Materials shall be limited to steel, wood, concrete, coated fabrics, and fiberglass-reinforced plastic tanks.

4.4.2 The elevated wood and steel tanks shall be supported on steel towers or reinforced concrete towers.

4.5 Workmanship.

4.5.1 In addition to complying with the requirements of this standard, it is expected that the manufacturers of approved structures will also follow the spirit of the standard by using their experience and ability to create structures that shall prove reliable under all specified conditions.

4.5.1.1 Manufacturers shall replace all parts that are defective due to faulty materials or workmanship and shall replace all parts that fail to comply with this standard.

4.5.2 The contractor's representatives shall provide careful inspection during shop fabrication and field erection.

4.5.2.1 The inspection shall include, but shall not be limited to, a check of the following:

(1) The thickness of butt-welded plates in tanks and tubular columns
(2) The appearance of welding in tank plates and in tubular columns and at struts, except near the ladder and base of the structure
(3) The extent of dents and out-of-roundness of tubular columns and struts

4.6 Plans.

4.6.1 The contractor shall furnish stress sheets and plans required by the purchaser and the authority having jurisdiction for approval or for obtaining building permits and licenses for the erection of the structure.

4.6.2 Approval of Layouts.

4.6.2.1 Complete information regarding the tank piping on the tank side of the connection to the yard or sprinkler system shall be submitted to the authority having jurisdiction for approval.

4.6.2.2 The information submitted shall include the following:

(1) Size and arrangement of all pipes
(2) Size, location, and type of all valves, tank heater, and other accessories
(3) Steam pressures available at the heater
(4) Arrangement of, and full information regarding, the steam supply and return system together with pipe sizes
(5) Details of construction of the frostproof casing
(6) Where heating is required, heat loss calculations
(7) Structural drawings and calculations
(8) Seismic bracing details and calculations
(9) Operational settings and sequence of operation
(10) Monitoring equipment and connections
(11) Underground details including foundations, compaction, and backfill details and calculations
(12) Buoyancy calculations for buried tanks

4.7 Tank Contractor Responsibility.

4.7.1 Any necessary work shall be handled by experienced contractors.

4.7.1.1 Careful workmanship and expert supervision shall be employed.

4.7.1.2 The manufacturer shall warranty the tank for at least 1 year from the date of completion and final customer acceptance.

4.7.2 Upon completion of the tank construction contract, and after the contractor has tested the tank and made it watertight, the tank contractor shall notify the authority having jurisdiction so that the tank can be inspected and approved.

4.7.3 Cleaning Up.

4.7.3.1 During and upon completion of the work, the contractor shall remove or dispose of all rubbish and other unsightly material in accordance with NFPA 241.

4.7.3.2 The condition of the premises shall be as it was before tank construction.

4.8 Attachments to Tank Structures.

4.8.1 If tank structures are used to support signs, flagpoles, steel stacks, or similar objects, they shall be specifically designed for the purpose.

4.8.2* Confined entry requirements signs shall be posted at each shell manway.

4.9 Lightning Protection. To prevent lightning damage to tanks, protection shall be installed in accordance with NFPA 780.

4.10 Strength.

4.10.1 The material, as specified, shall be without defects that affect its strength or service.

4.10.2 The workmanship shall be of such quality that defects or injuries are not produced during manufacture or erection that cause the specified allowable stresses to be exceeded under any specified design loads.

•

4.10.3 The structure and its details shall possess the requisite strength and rigidity.

4.11 National Standards. Materials produced and tested in accordance with the requirements of a recognized national standard and within the mechanical (strength), metallurgical, and chemical limitations of one of the material grades specified in this document shall be permitted.

4.12 Loads.

4.12.1 Dead Load.

4.12.1.1 The dead load shall be the estimated weight of all permanent construction and fittings.

4.12.1.2 The unit weight of steel shall be considered to be 490 lb/ft^3 (7849 kg/m^3); the unit weight of concrete shall be considered to be 144 lb/ft^3 (2307 kg/m^3).

4.12.2 Live Load.

4.12.2.1 Under normal conditions, the live load shall be the weight of all the liquid when it overflows the top of the tank.

4.12.2.2 The unit weight of water shall be considered to be 62.4 lb/ft^3 (1000 kg/m^3).

4.12.2.3 Proper provisions shall be made for temporary stresses during erection.

4.12.2.4 Where roofs have slopes of less than 30 degrees, they shall be designed to support a uniform weight of 25 lb/ft^2 (122 kg/m^2) on the horizontal projection.

4.12.3 Wind Load.

4.12.3.1 Under normal conditions, the wind load or pressure shall be assumed to be 30 lb/ft^2 (147 kg/m^2) on vertical plane surfaces, 18 lb/ft^2 (88 kg/m^2) on projected areas of cylindrical surfaces, and 15 lb/ft^2 (73 kg/m^2) on projected areas of conical and double-curved plate surfaces.

4.12.3.2 Where designing for wind velocities over 100 mph (161 km/hr), all of these specified unit pressures shall be adjusted in proportion to the square of the velocity, assuming that the pressures are for 100 mph (161 km/hr).

4.12.4 Earthquake Load.

4.12.4.1 Tank structures shall comply with the local building code for seismic requirements.

4.12.4.2 Specific design criteria shall be contained in the appropriate chapter for the particular tank, or in local codes, whichever is more stringent.

4.12.4.3 Flat-bottom tanks shall be designed by a method that accounts for the sloshing of the contents (effective mass method).

4.12.5 Balcony, Platform, and Ladder Loads.

4.12.5.1 A vertical load of 1000 lb (454 kg) shall be assumed to be applied to any 10 ft^2 (0.93 m^2) of area on the balcony floor and on each platform, 500 lb (227 kg) applied to any 10 ft^2 (0.93 m^2) area on the tank roof, and 350 lb (159 kg) on each vertical section of ladder.

4.12.5.2 All of the structural parts and connections shall be designed to withstand such loads.

4.12.5.3 These specified loads shall not be required to be combined with snow loading.

4.12.6 Columns and Struts.

4.12.6.1 All steel columns and struts shall be designed in accordance with the applicable AWWA tank design standard for the type of tank being constructed.

N **4.12.6.2** Where no AWWA design standard exists for the type of tank being constructed, steel columns and struts shall be designed in accordance with ANSI/AISC 360.

4.12.6.3 The minimum thickness for any columns in contact with water shall be 0.25 in. (6.4 mm).

4.12.6.4 Tubular sections shall not be flattened to form end connections.

4.12.7 Stress Increases.

4.12.7.1 Where wind or earthquake loads are considered in calculating stresses, the maximum permissible increase in working unit stresses shall be one-third, provided the resulting section is not less than required for dead and live loads alone.

4.12.7.2 Wind and earthquake loads shall not be required to be considered simultaneously.

4.12.8 Roof Construction.

4.12.8.1 The roof shall be designed to withstand the forces anticipated during the erection, inspection, testing, and maintenance of the tank.

4.12.8.2 The maximum allowable uniform live load (in pounds per square foot) and the maximum allowable concentrated load (in pounds) shall be identified on the design drawings and tank nameplate.

4.13 Welding. All welding shall be completed in accordance with AWWA D100, NFPA 241, and ASME *Boiler and Pressure Vessel Code*, Section IX.

4.14 Roofs.

4.14.1* All tanks shall have roofs.

4.14.1.1 OSHA-compliant (29 CFR 1910) standard railing shall be placed around the roof hatch(es) and other accessories that require access.

4.14.2 A perimeter roof guardrail shall not be required on lap-jointed bolted steel tanks when fitted with a manway platform, roof walkway, and guardrails.

4.14.3 Guardrails shall be constructed in accordance with OSHA 29 CFR 1910.

4.15 Roof Vent.

4.15.1 Where the steel roof is essentially airtight, there shall be a substantial vent above the maximum water level.

4.15.2 A vent pipe shall have a cross-sectional area equal to a minimum of one-half the area of the discharge pipe(s) or fill pipe, whichever is the larger.

4.15.3 A corrosion-resistant screen or perforated plate with ⅜ in. (9.5 mm) holes, to exclude birds or other animals, shall be provided and have a net area at least equal to the vent line.

4.15.4 In the case of a screen, a gross area at least one and one-half times the cross-sectional area of the discharge pipe(s) or fill pipe, whichever is larger, shall be required.

4.15.5 The screen or perforated plate shall be protected against the accumulation of sleet.

4.15.6 The weather hood above the perforated plate or screen, or its equivalent, shall be readily removable.

4.15.7 The overflow pipe shall not be included as vent area.

4.15.8 The vent shall be permitted to be combined with the roof finial.

4.15.9 Equivalent venting shall be permitted to be used, provided the area cannot be obstructed by sleet, and the ingress of birds or other animals shall be prevented.

4.15.10 Where dual service is specified and where local health departments require screening vents against insects, a special fail-safe vent shall be provided to minimize the risk in the event that the insect screens occlude.

4.15.11 A vent fan attached to a flanged neck shall be installed on steel tanks prior to entering the tank.

4.15.11.1 The flanged neck shall be designed to accommodate an adequately sized exhaust fan.

4.16 Test Reports. Copies of mill test reports for steel plates and certificates of compliance for bolts and other structural members shall be maintained at the premises of the vendor and shall be made available for review by the purchaser.

Chapter 5 Welded-Carbon Steel and Composite Concrete and Carbon Steel Gravity Tanks and Suction Tanks

N **5.1 General.**

N **5.1.1** This chapter shall apply to the design, fabrication, and erection of welded-carbon steel or composite concrete and carbon steel gravity water tanks, including pump suction tanks.

N **5.1.2 Capacity.**

N **5.1.2.1** The capacity of the tank shall be the number of U.S. gallons (cubic meters) available above the outlet opening.

N **5.1.2.2** The net capacity between the outlet and the inlet of the overflow shall be equal to at least the rated capacity.

N **5.1.2.3** The net capacity for gravity tanks with large plate tank risers shall be the number of U.S. gallons (cubic meters) between the inlet of the overflow and the designated low-water level line.

N **5.1.3 Standard Sizes.**

N **5.1.3.1** The standard net capacity sizes of steel tanks shall be as follows:

(1) 5000 gal (18.93 m^3)
(2) 10,000 gal (37.85 m^3)
(3) 15,000 gal (56.78 m^3)
(4) 20,000 gal (75.70 m^3)
(5) 25,000 gal (94.63 m^3)
(6) 30,000 gal (113.55 m^3)
(7) 40,000 gal (151.40 m^3)
(8) 50,000 gal (189.25 m^3)
(9) 60,000 gal (227.10 m^3)
(10) 75,000 gal (283.88 m^3)
(11) 100,000 gal (378.50 m^3)
(12) 150,000 gal (567.75 m^3)
(13) 200,000 gal (757.00 m^3)
(14) 300,000 gal (1135.50 m^3)
(15) 500,000 gal (1892.50 m^3)

N **5.1.3.2** Tanks of other sizes shall be permitted.

N **5.1.4 Form.** Steel tanks shall be permitted to be of any form desired, provided they conform to all requirements of this standard.

N **5.2 Materials.**

N **5.2.1** All tank foundations, materials, accessories, fabrication, construction, and welding shall be in accordance with AWWA D100 or AWWA D107.

N **5.2.2** All tank and tower foundations, steel tank towers, pipe connections and fittings, valve enclosures and frost protection, tank heating and acceptance test requirements shall be in accordance with this standard.

N **5.3 Preventing Ice Damage.** During construction, the contractor shall keep the tank, structure, and building roofs free of ice caused by leakage until the tank equipment is made watertight.

N **5.4 Corrosion Protection for Bottom Plates on Soil or Concrete.**

N **5.4.1*** The underside of all bottom plates shall be protected against corrosion by one of the methods required by 5.4.1.1 or 5.4.1.2.

N **5.4.1.1** The sand pad, including pH range of the lime sand mix, sulfate content, and chloride content, shall meet the requirements of AWWA D100 or AWWA D107.

N **5.4.1.2** Where permitted by environmental authorities, an oiled sand cushion shall be permitted to be used in accordance with AWWA D100.

N **5.5 Painting Inaccessible Areas.**

N **5.5.1** Except for the underside of the floor on ground-supported flat-bottom tanks, faying surfaces of bolted connections that prohibit coatings, and overlapping surfaces of single-welded lap joints above the high waterline, parts that are inaccessible after fabrication, but that are subject to corrosion, shall be protected by paint before assembly.

N **5.5.1.1** This requirement shall not apply to the overlapping surfaces of single-welded lap joints above the high waterline.

N **5.6 Painting and Corrosion Protection.**

N **5.6.1** Except where exempted by 5.5.1, all interior surfaces of steel tanks that are exposed to water immersion or the vapor phase zone above the high water level shall be cleaned by near-white blasting in accordance with SSPC SP 10 and shall be painted in accordance with the requirements of AWWA D102 and the project specifications. If cathodic protection is used to supplement corrosion protection on the immersed surfaces then it shall be done in accordance with AWWA D104 or AWWA D106.

N **5.6.2** All exterior surfaces and inside dry surfaces (pedestal tanks) shall be cleaned by commercial blasting in accordance with SSPC SP 6 and shall be coated in accordance with the requirements of AWWA D102.

N **5.6.3** Other interior or exterior paint systems shall be permitted to be used, provided permission is first obtained from the authority having jurisdiction.

N **5.6.4** After construction, all weld seams, unprimed surfaces, or any areas where the primer (if preprimed) has been damaged shall be blast-cleaned and primed with the specified coating system primer.

N **5.7 Painting Application.** All painting shall be applied in accordance with the appropriate requirements of *SSPC Systems and Specifications Steel Structures Painting Manual*, Chapter 5.

N **5.8 Heavy Metals.** The coating systems described in this section shall not exceed state and local limits of regulated heavy metals.

Chapter 6 Factory-Coated, Bolted Carbon Steel Tanks

N **6.1 General.**

N **6.1.1*** This chapter shall apply to the design, fabrication, and erection of bolted carbon steel water tanks, including pump suction tanks with factory-applied coatings.

N **6.1.2 Standard Capacity.** The standard capacity of bolted tanks varies with the number of panels added to the diameter and ranges from 4000 gal to approximately 500,000 gal (15.1 m^3 to approximately 1900 m^3) net capacity.

N **6.1.2.1** Tanks of other capacities shall be permitted.

N **6.1.3 Form.**

N **6.1.3.1** Bolted tanks shall be cylindrical.

N **6.1.3.2** All joints, including vertical, horizontal, shell-to-roof, and shell-to-bottom plates or sheets, shall be field bolted.

N **6.1.3.3** Coatings shall be factory applied in accordance with AWWA D103.

N **6.1.3.4** Bolt holes shall be shop-punched or drilled for field assembly.

N **6.1.3.5** Joints that are in contact with water and weathertight joints shall be sealed.

N **6.2 Materials, Fabrication, and Installation.**

N **6.2.1** All design materials, fabrication, and installation shall be in accordance with AWWA D103.

N **6.2.2** All tank and tower foundations, accessories, steel tank towers, pipe connections and fittings, valve enclosures and frost protection, tank heating and acceptance test requirements shall be in accordance with this standard.

N **6.3 Corrosion Protection.** Where cathodic protection is used to supplement corrosion protection on the immersed surfaces or underside of floor plates, it shall be done in accordance with AWWA D104 or AWWA D106.

N **6.4 Structural Shapes.** Aluminum shapes shall be permitted to be used for portions of the tank that are not in contact with water and shall follow the design criteria in AWWA D108.

Chapter 7 Pressure Tanks

7.1 General.

7.1.1 Service. Pressure tanks shall be permitted to be used for limited private fire protection services, such as those covered by the following NFPA standards:

(1) NFPA 13, *Standard for the Installation of Sprinkler Systems*
(2) NFPA 14, *Standard for the Installation of Standpipe and Hose Systems*
(3) NFPA 15, *Standard for Water Spray Fixed Systems for Fire Protection*

7.1.2 Pressure tanks shall not be used for any other purpose.

7.1.2.1 Pressure tanks approved by the authority having jurisdiction shall be permitted to be used for other purposes.

7.1.3 Capacity. The capacity shall be approved by the authority having jurisdiction.

7.1.4 Water and Air Pressure.

7.1.4.1 Pressure tanks shall be kept with a supply of water to meet the flow and duration demands of the fire protection system.

7.1.4.2* The quantity of air in the tank and pressure shall be sufficient to push all of the water out of the tank while maintaining the necessary residual pressure at the top of the system.

7.1.5* Air Lock. Methods used for the prevention of air lock shall be approved by the authority having jurisdiction in each case.

7.1.6 Location. Subject to the approval of the authority having jurisdiction, tanks shall be permitted to be buried in accordance with the requirements of 7.1.10.

7.1.7 Construction.

7.1.7.1* General. Pressure tanks shall be constructed in accordance with the ASME *Boiler and Pressure Vessel Code*, "Rules for the Construction of Unfired Pressure Vessels," Section VIII, Division 1, Unfired Pressure Vessels.

7.1.7.1.1 This requirement shall not apply where otherwise specified herein.

7.1.7.2 Supports.

7.1.7.2.1 The supports shall be steel or reinforced concrete and shall be located in a manner that prevents sagging or vibration and that properly distributes the loads caused by the weight of the vessel when full of water.

7.1.7.2.2 Stresses in steel supports shall not exceed those permitted by Section 13.4 for steel towers.

7.1.7.2.3 Horizontal tanks shall have at least one support near each end of the tank that is located so that combined stresses in any part of the tank do not exceed those specified in 13.4.6.

7.1.7.3 Painting. Tanks shall be cleaned and painted inside and outside in accordance with the requirements of Section 5.5 through Section 5.7. An ASME Specifications for Material stamp and an ASME Standard Pressure Vessel stamp shall not be rendered illegible.

7.1.8 Marking.

7.1.8.1 General. All stamps required by the ASME specification shall be applied.

7.1.8.1.1 The nameplate or water-level marking shall be securely fastened without obliterating any lettering.

7.1.8.1.2 If screws are used, they shall not penetrate more than one-half of the tank plate thickness.

7.1.8.2 Nameplate. A metal nameplate, with raised or stamped letters and numbers that are large enough to be easily read, that bears the following information shall be provided:

(1) Name and location of manufacturer
(2) Year of assembly
(3) Length and diameter
(4) Total capacity [gal (m^3)]
(5) Working pressure [lb/in.^{2} (bar)]

7.1.8.3 Water-Level Indicator.

7.1.8.3.1 The nameplate shall also serve as the water-level indicator by bearing an easily observed raised arrow.

7.1.8.3.2 The tank plate shall be marked "⅔ capacity line" in raised or stamped lettering behind the gauge glass and shall be located in such a position that the arrow is at the water level when the tank is two-thirds full. For horizontal tanks, the two-thirds capacity line is $^{63}/_{100}$ of the diameter above the bottom of the tank.

7.1.8.3.3 Where the design water level is at a point other than the ⅔ level, the nameplate shall be so lettered and positioned behind the gauge glass accordingly.

7.1.9 Housing.

7.1.9.1 Where subject to freezing, the tank shall be located in a substantial noncombustible housing.

7.1.9.2 The tank room shall be large enough to provide free access to all connections, fittings, and manholes, with at least 18 in. (457 mm) around the rest of the tank.

7.1.9.3 The distance between the floor and any part of the tank shall be at least 3 ft (0.91 m).

7.1.9.4 The floor of the tank room shall be watertight and shall be arranged to drain outside the enclosure.

7.1.9.5 The tank room shall be adequately heated to maintain a minimum temperature of 40°F (4.4°C) and shall be equipped with ample lighting facilities.

7.1.10 Buried Tanks. Where necessary due to lack of space or other conditions, pressure tanks shall be permitted to be buried, provided the requirements of 7.1.10.1 through 7.1.10.7 are satisfied.

7.1.10.1 The tank shall be located below the frost line to protect against freezing.

7.1.10.2 The end of the tank, and at least 457 mm (18 in.) of its shell, shall project into the building basement or into a pit in the ground provided with protection against freezing.

7.1.10.3* There shall be adequate space for inspection, maintenance, and use of the tank manhole for interior inspection.

7.1.10.4 The exterior surface of the tank shall be cleaned and painted in accordance with 7.1.7.3, and additional protection shall be provided as required by 7.1.10.4.1 and 7.1.10.4.2.

7.1.10.4.1 An approved cathodic system of corrosion protection shall be provided.

7.1.10.4.2 At least 12 in. (305 mm) of sand shall be backfilled around the tank.

7.1.10.5 The tank shall be located above the maximum ground water level so that the buoyancy of the tank, when empty, does not force it upward. The tank shall be permitted to be anchored to a concrete base as an alternative.

7.1.10.6 The tank shall be designed with strength to resist the pressure of earth to which it is subjected.

7.1.10.7 A manhole shall be located on the vertical centerline of the tank end as close as possible to the knuckle but remaining clear of it.

7.2 Pipe Connections and Fittings.

7.2.1 Openings.

7.2.1.1 A manhole and all openings needed for the connection of the piping and fittings specified in 7.2.1.2 and 7.2.1.3 shall be provided.

7.2.1.2 The manhole and threaded openings shall conform in design to the ASME *Boiler and Pressure Vessel Code*, "Rules for the Construction of Unfired Pressure Vessels."

7.2.1.3 The manhole shall be placed below the water level.

7.2.2 Tank Discharge.

7.2.2.1 The discharge pipe shall be sized to supply the required amount of water for the fire protection system, but shall not be less than 4 in. (102 mm) in size in any case.

7.2.2.2 The discharge pipe shall be connected to the bottom of the tank by means of a fitting that projects 2 in. (51 mm) above the bottom to form a settling basin and to prevent sediment from passing into the system.

7.2.2.3 A listed horizontal swing-check valve and a listed indicating valve shall be located in the discharge pipe, directly under or near the tank.

7.2.2.4 The pipe shall be adequately supported.

7.2.3 Filling Pipe.

7.2.3.1 The water-filling pipe shall be at least 1½ in. (38 mm) in size, shall be run separately from the filling pump or other acceptable source of supply, and shall be adequately supported and protected from mechanical injury.

7.2.3.2* The filling pipe shall be connected to the top or bottom of the tank as required by the authority having jurisdiction.

7.2.3.3 A listed check valve and an indicating control valve shall be provided in the horizontal position in the pipe near the tank.

7.2.3.4 The indicating control valve shall be placed between the check valve and the tank.

7.2.4 Air Pipe.

7.2.4.1 The air supply pipe shall be at least 1 in. (25.4 mm) in size, well supported, and protected from breakage.

7.2.4.2 The air supply pipe shall be connected to the tank above the water level.

7.2.4.3 A reliable horizontal bronze-seat swing-check valve and listed renewable-disc globe valve shall be provided in the pipe near the tank.

7.2.4.4 The globe valve shall be placed between the tank and the check valve.

7.2.5 Water-Level Gauge.

7.2.5.1 A ¾ in. (19.1 mm) water-level gauge with a listed valve at each end shall be provided with the center of the glass tube at the normal water level.

7.2.5.2 The gauge glass shall be not over 12 in. (305 mm) long for horizontal tanks or 18 in. (457 mm) long for vertical tanks.

7.2.5.3 Listed angle globe valves with renewable discs shall be installed in the connections from the gauge to the tank and shall be independent of the shutoff valves that are a part of the gauge fittings.

7.2.5.4 The water-level gauge shall be connected through valves into the tank.

7.2.5.5 A petcock shall be provided for draining the glass.

7.2.5.6 All fittings and nipples shall be of brass, not less than ¾ in. (19.1 mm) in size.

7.2.5.6.1 The nipple that extends into the tank shall be permitted to be ½ in. (12.7 mm) in size.

7.2.5.7 The glass gauge tube shall be protected from mechanical injury by a guard that consists of at least three 3/16 in. (4.8 mm) brass rods.

7.2.5.8 The valves on the water-level gauge connections shall be opened only when ascertaining the amount of water in the tank.

7.2.6 Air-Pressure Gauge.

7.2.6.1 A listed 4½ in. (114 mm) dial, double-spring gauge shall be connected into the air chamber between the tank and any valve, generally to the line between the upper end of the water-level gauge and the tank.

7.2.6.2 The pressure gauge shall have a maximum range equivalent to twice the normal working pressure when installed and shall be controlled by a valve that is arranged to drain.

7.2.6.3 A plugged outlet at least ¼ in. (6.4 mm) in size shall be provided between the valve and the gauge for the inspector's gauge.

7.2.7 Safety Appliances.

7.2.7.1 A brass relief valve not less than ¾ in. (19.1 mm) in size that is set to operate at a pressure that is 10 percent in excess of the normal tank pressure shall be placed in the air supply pipe between the check valve and the air compressor.

7.2.7.2 There also shall be a brass relief valve not less than 1½ in. (38.1 mm) in size at the filling pump that is set to relieve pressures that are 10 percent in excess of the pressure at the pump when the tank is under normal working pressure.

7.2.7.3 No safety appliances shall be installed between the tank and other valves.

7.2.8 Emergency Drain.

7.2.8.1 Provisions shall be made to drain each tank independently of all other tanks and the sprinkler system by means of a pipe that is not less than 1½ in. (nominal 40 mm) in diameter.

7.2.8.1.1 The drain valve shall be a globe valve with a renewable disc and shall be located near the tank.

7.2.8.2 Use of drains other than those shown in Figure B.1(a) and Figure B.1(b) below the pressure tank, after shutting off other water supplies, shall not be permitted under any condition, as collapse of the pressure tank can result.

7.2.9 Water Filling Supply.

7.2.9.1 The filling supply or pump shall be reliable and shall be capable of replenishing the water that is required to be maintained in the tank with the required air pressure restored in not more than 4 hours.

7.2.9.2 A relief valve shall be provided at the pump, as specified in 7.2.7.

7.2.10 Air Compressor.

7.2.10.1 An air compressor capable of delivering not less than 16 ft^3/min (0.45 m^3/min) of free air for tanks of 7500 gal (28.39 m^3) total capacity, and not less than 20 ft^3/min (0.57 m^3/min) for larger sizes, shall be provided.

7.2.10.2 The compressor shall be located in the tank house.

7.2.10.2.1 The compressor shall be permitted to be located elsewhere if permitted by the authority having jurisdiction.

7.2.10.3 A safety valve shall be provided, as specified in 7.2.7.

7.2.11 Arrangement. All pipe connections and valves, including the manhole, the emergency drain valve, and all valves on the discharge pipe, shall be arranged for convenient manipulation.

7.2.12* Watertight Intersections at Roofs and Floors. The intersections of all piping with the building roof and concrete or waterproof floors shall be watertight.

7.2.13 Fire Protection. The tank shall be protected by automatic sprinklers if combustible contents or construction could heat the tank in the event of a fire.

Chapter 8 Wood Gravity Tanks and Suction Tanks

8.1 General.

8.1.1 This chapter shall apply to the design, fabrication, and erection of wood gravity water tanks, including pump suction tanks.

8.1.2 Capacity.

8.1.2.1 The capacity of the tank shall be the number of U.S. gallons (cubic meters) available above the outlet opening.

8.1.2.2 The net capacity between the outlet opening of the discharge pipe and the inlet of the overflow shall be at least equal to the rated capacity.

8.1.3* Standard Sizes. The standard net capacity sizes of wood tanks shall be as follows:

(1) 5000 gal (18.93 m^3)
(2) 10,000 gal (37.85 m^3)
(3) 15,000 gal (56.78 m^3)
(4) 20,000 gal (75.70 m^3)
(5) 25,000 gal (94.63 m^3)
(6) 30,000 gal (113.55 m^3)
(7) 40,000 gal (151.40 m^3)
(8) 50,000 gal (189.25 m^3)
(9) 60,000 gal (227.10 m^3)
(10) 75,000 gal (283.88 m^3)
(11) 100,000 gal (378.50 m^3)

8.1.4 Strength.

8.1.4.1 The materials as specified shall have no defects other than those that are permitted by the grading rules for the lumber specified in 8.2.2.

8.1.4.2 The use of second-hand materials, including such materials as hoops and lumber, shall not be permitted.

8.1.4.3 The workmanship shall be of such quality that defects or injuries are not produced during manufacture or erection.

8.1.4.4* Unit stresses, as specified in Section 8.4, shall not be exceeded except where additionally reinforced.

8.1.4.5 The structure and its details shall possess the requisite strength and rigidity.

8.2 Material.

8.2.1 Lumber — General. All lumber shall be well-seasoned and free from rot, sap, loose or unsound knots, worm holes, and shakes in accordance with National Wood Tank Institute Bulletin S82.

8.2.2 Lumber — Staves and Bottom.

8.2.2.1 Untreated lumber in the staves and bottom shall be thoroughly air-dried (below 17 percent moisture content) "all heart" or "tank stock" without any sapwood after shaping.

8.2.2.2* Acceptable untreated species, in order of preference, shall be redwood, western yellow cedar, southern white cedar (dismal swamp), western red cedar, and Douglas fir (coast type).

8.2.2.3 Treatment.

8.2.2.3.1 Acceptable treated species shall include all those specified in 8.2.2.1 and yellow pine, all without sapwood restriction.

8.2.2.3.2 Treatment shall consist of a 6 lb/ft^3 to 8 lb/ft^3 (96 kg/m^3 to 128 kg/m^3) retention of creosote or pentachlorophenol that is applied by means of the empty-cell process after shop fabrication, in accordance with the American Wood Preservers Association.

8.2.3 Timber Supports. Wooden dunnage beams, where used, shall be a dense grade of southern pine or Douglas fir or shall be a construction heart-untreated redwood or red cypress (coast type).

8.2.3.1 Structural grades of other species shall be permitted to be used, provided they are treated with 6 lb/ft^3 to 8 lb/ft^3 (96 kg/m^3 to 128 kg/m^3) retention of creosote or pentachlorophenol that is applied by means of the empty-cell process in accordance with the standard specifications of the American Wood Preservers Association. *(See 8.4.1 and 8.5.8.)*

8.2.3.2 Wood dunnage beams shall be at least 4 in. × 6 in. (102 mm × 152 mm) nominal size.

8.2.4 Hoops.

8.2.4.1 Hoops shall be round bars of steel.

8.2.4.2 The steel bars shall conform to ASTM A36/A36M, ASTM A502, or ASTM A675/A675M.

8.2.4.3 Steel shall be made only by the open-hearth or electric-furnace processes.

8.2.5 Hoop Lugs. The lugs shall be malleable iron, cast steel, or fabricated steel and shall have equal or greater ultimate strength than the steel hoop with which they are used that is in accordance with ASTM A36/A36M, ASTM A502, or ASTM A675/A675M.

8.2.6 Steel Shapes. The steel for structural shapes shall conform to ASTM A36/A36M.

8.3 Loads.

8.3.1 Dead Load. The dead load shall be the estimated weight of all permanent construction and fittings.

8.3.2 Live Load.

8.3.2.1 Under normal conditions, the live load shall be the weight of all the liquid when it overflows the top of the tank.

8.3.2.2 The unit weight of water shall be considered to be 62.4 lb/ft^3 (1000 kg/m^3).

8.3.2.3 Proper provision shall be made for temporary stresses during erection.

8.3.2.4 Where roofs have a slope of less than 30 degrees, they shall be designed to support a uniform weight of 25 lb/ft^2 (122 kg/m^2) on the horizontal projection.

8.3.3 Wind Load.

8.3.3.1 Under normal conditions, the wind load or pressures shall be assumed to be 30 lb/ft^2 (147 kg/m^2) on vertical plane surfaces, 18 lb/ft^2 (88 kg/m^2) on projected areas of cylindrical surfaces, and 15 lb/ft^2 (73 kg/m^2) on projected areas of conical and double-curved plate surfaces.

8.3.3.2 When designing for wind velocities over 100 mph (161 km/hr), all of these specified unit pressures shall be adjusted in proportion to the square of the velocity, assuming that the pressures are for velocities of 100 mph (161 km/hr).

8.3.4 Earthquake Load. Tank structures shall meet local requirements for resisting earthquake damage.

8.3.5 Balcony and Ladder Loads.

8.3.5.1 A vertical load of 1000 lb (454 kg) shall be assumed to be applied to any 10 ft^2 (0.93 m^2) of area on the balcony floor and on each platform; 500 lb (227 kg) shall be assumed to be applied to any 10 ft^2 (0.93 m^2) of area on the tank roof; and 350 lb (159 kg) shall be assumed to be applied on each vertical section of ladder.

8.3.5.2 All structural parts and connections shall be designed to withstand such loads.

8.3.5.3 The loads specified shall not be combined with snow loading.

8.4 Unit Stresses.

8.4.1* General. The following stresses in pounds per square inch (megapascals) shall apply particularly to wood tanks and shall not be exceeded.

8.4.1.1 Tension Hoops.

8.4.1.1.1 The unit stress for tension hoops made of steel in accordance with ASTM A675/A675M shall be 15,000 lb/in.^{2} (103.43 MPa) (use with hydrostatic load and neglect initial tension).

8.4.1.1.2 Steel in accordance with ASTM A36/A36M or ASTM A502 shall have a unit stress of 20,000 lb/in.^{2} (137.90 MPa).

8.4.1.2 Timber. The allowable working stresses for timbers referenced in 8.2.3 and 8.5.8 shall be as specified in Table 8.4.1.2.

8.4.2 Wind and Earthquake Allowance.

8.4.2.1 For stresses that are due to the combination of wind or earthquake with other loads, the working unit stresses specified in 8.4.1 through 8.4.1.2 shall be permitted to be increased by 33⅓ percent.

Table 8.4.1.2 Working Stresses for Timber (Select Grade)

	Allowable Stress							
	Bending							
	In Extreme Fiber		Horizontal Shear		Compression Perpendicular to Grain		Compression Parallel to Grain; Short Columns	
Species	psi	MPa	psi	MPa	psi	MPa	psi	MPa
Cedar, western red	900	6.21	80	0.55	200	1.38	700	4.83
Cedar, northern and southern white	750	5.17	70	0.48	175	1.21	550	3.79
Douglas fir (western Washington and Oregon)	1600	11.03	90	0.62	345	2.38	1175	8.10
Douglas fir (western Washington and Oregon), dense grade	1750	12.07	105	0.72	380	2.62	1290	8.89
Douglas fir (Rocky Mountain type)	1100	7.58	85	0.57	275	1.90	800	5.52
Pine, southern yellow	1600	11.03	110	0.76	345	2.38	1175	8.10
Pine, southern yellow, dense	1750	12.07	120	0.83	380	2.62	1290	8.89
Pine, white, sugar, western white, western yellow	900	6.21	85	0.57	250	1.72	750	5.17
Pine, Norway	1100	7.58	85	0.57	300	2.07	800	5.52
Redwood	1200	8.27	70	0.48	250	1.72	1000	6.90
Spruce, red, white, Sitka	1100	7.58	85	0.57	250	1.72	800	5.52

8.4.2.2 Wind and earthquake loads shall not be required to be considered simultaneously.

8.4.2.3 In no case shall the strength of the member be less than that required for dead and live loads alone.

8.5 Details of Design.

8.5.1 Lumber Thickness. The lumber in the staves and in the bottom shall be at least 2½ in. (64 mm) (nominal), dressed to not less than 2⅛ in. (54 mm) thickness for tanks less than 20 ft (6.1 m) in depth or diameter; for larger tanks, the lumber shall be at least 3 in. (76 mm) (nominal), dressed to not less than 2⅜ in. (60 mm) thickness.

8.5.2 Hoop Sizes. Hoops shall not be smaller than the pitch diameter of ¾ in. (19.1 mm) thread. No more than two sizes of hoops shall be used on a tank.

8.5.3* Hoop Schedules.

8.5.3.1 A hoop shall be assumed to support one-half the length of the stave to the two adjacent hoops.

8.5.3.2* Other schedules shall be acceptable, provided the unit stresses specified in Section 8.4 are not exceeded.

8.5.4 Hoops at Bottom.

8.5.4.1 One hoop shall be placed at approximately the center of the bottom planks of tanks with diameters of 19 ft (5.8 m) or less.

8.5.4.1.1 The stress in this hoop shall not exceed one-half the allowable unit tension, with the excess strength provided to accommodate the swelling of the bottom planks.

8.5.4.2 On tanks with diameters of over 19 ft (5.8 m), two hoops of equal size shall be placed opposite the tank bottom.

8.5.4.2.1 The stress in the upper hoop shall be limited as specified in 8.5.4.1.1.

8.5.5 Hoops at Top. The top hoops shall be placed 3 in. (76 mm) below the bottom of the flat cover joists or 3 in. (76 mm) below the top of the staves if the flat cover is omitted.

8.5.5.1 The maximum spacing of hoops shall not exceed 21 in. (533 mm).

8.5.6 Hoop Lugs.

8.5.6.1 The ends of the hoop sections shall be connected by malleable iron, cast steel, or fabricated steel lugs and shall have equal or greater ultimate strength than the steel hoop with which they are used that is in accordance with ASTM A36/A36M or ASTM A502.

8.5.6.2 The lugs shall be so designed that water cannot be pocketed.

8.5.6.3 The hoops shall be so located on the tank that the lugs form fairly uniform spiral lines.

8.5.7 Main Supports. Steel I-beams or reinforced concrete beams shall be used for the main supports where the dunnage beams rest.

8.5.8 Spacing of Supports.

8.5.8.1 The maximum distance in the clear between the beams where the tank bottom rests shall not exceed 21 in. (533 mm).

8.5.8.2 The maximum distance between the outer edge of the outer dunnage beam and the inside surface of the tank staves, measured on a line perpendicular to the beam at its midpoint, shall not exceed 14 in. (356 mm).

8.5.9 Air Circulation Under Tank Bottom. Tank supports shall be designed to allow the free circulation of air under the tank bottom and around the ends of the staves.

8.6 Workmanship.

8.6.1* Lumber Edges and Surfaces. Planks for the staves and bottom shall be planed on both sides.

8.6.1.1 The edges of the staves and bottom planks shall be machine-planed or sawed.

8.6.1.2 The edges of staves shall be cut to obtain full bearing at the joints.

8.6.1.3 The last stave to be placed in the tank shall be carefully planed to the required size.

8.6.2 Croze.

8.6.2.1 The croze shall be cut at right angles to the centerline of the staves.

8.6.2.2 The edges of the bottom planks shall be beveled on the underside and smoothed off on the upper side by planing to obtain a tight joint at the croze.

8.6.2.3 The depth and width of the croze shall be at least ¾ in. (19.1 mm) and 2⅛ in. (54 mm), respectively, for 3 in. (76 mm) nominal staves, and ⅝ in. (15.9 mm) and 2 in. (51 mm), respectively, for 2½ in. (64 mm) nominal staves.

8.6.3 Chime.

8.6.3.1 The chime shall be of uniform depth and shall be not less than 3 in. (76 mm).

8.6.3.2 Before erection, the chimes of staves shall be fastened with at least two nails or staples at least 1¼ in. (32 mm) long.

8.6.3.3 Nails or staples shall be coated with zinc or copper, or they shall be of other material that is highly resistant to corrosion.

8.6.4 Dowels. The edges of each bottom plank shall be bored with holes not over 5 ft (1.5 m) apart for wooden dowels not less than ½ in. (12.7 mm) in diameter for planks up to 2½ in. (64 mm) nominal, and ⅝ in. (15.9 mm) in diameter above that thickness.

8.6.5 Splices.

8.6.5.1 Finger joint splices shall be used in a stave or in a bottom plank where permitted by the authority having jurisdiction.

8.6.5.2 Such joints in adjacent staves or bottom planks shall be staggered a minimum of 2 ft (0.61 m).

8.6.6 Joints at Bottom. The joints between staves shall not be closer than ½ in. (12.7 mm) to a joint between the bottom planks.

8.6.7 Extra Staves. One or more extra staves shall be shipped with each tank.

8.6.8 Marking of Staves. The proper hoop spacing shall be plainly marked on at least six staves before shipment.

8.6.9 Clearance at Supports.

8.6.9.1 The distance between the ends of dunnage beams and the inside surface of the staves shall be not less than 1 in. (25.4 mm) or more than 3 in. (76 mm).

8.6.9.2 The supports shall be of such depth that the clearance beneath the ends of staves is not less than 1 in. (25.4 mm) at any point.

8.6.10 Hoop Forming. Hoops shall be cut to the proper length and shall be bent in the shop to the radius of the tank.

8.6.11 Hoop Threads. The nut threads shall fit tightly and shall be U.S. Standard.

8.6.12 Hoop Tightening. Care shall be taken when setting up the nuts on the hoops to prevent an excessive initial stress in the hoops. The threads of the nuts shall be fully engaged.

8.6.13 Removal of Rubbish. All waste lumber and rubbish shall be removed from the inside of the tank and from the flat cover, if provided, before filling to prevent possible obstruction of piping.

8.7 Accessories.

8.7.1 Roof — General.

8.7.1.1 Where the tank is located outdoors, it shall have a flat wooden cover over the top and a conical roof above the wooden cover.

8.7.1.1.1 The flat cover shall not be required, and the conical cover shall be made self-supporting, provided the approval of the detailed design is first obtained from the authority having jurisdiction.

8.7.1.2 Roofs shall be constructed as shown in Figure B.1(c) and Figure B.1(d), or shall be in accordance with other designs approved by the authority having jurisdiction.

8.7.1.3 Roof boards shall be of not less than 1 in. (25.4 mm) nominal thickness or ⅜ in. (9.5 mm) exterior grade plywood that is laid without spacing between.

8.7.1.4 If plywood is used, the end joints shall be made over roof joists, or ply clips shall be used to support the edges.

8.7.1.5 Shiplap or matched joints shall be used on boards in the flat cover, unless plywood is used.

8.7.1.6 The joint between the tank staves and roof shall be tight.

8.7.1.7 Nails or staples shall be heavily galvanized or shall be of nonferrous metals.

8.7.2 Flat Cover.

8.7.2.1 The flat cover, if provided, shall rest on parallel joists and shall be spaced not over 36 in. (914 mm) on centers.

8.7.2.2 The nominal size of the joists shall be at least 2 in. × 6 in. (51 mm × 152 mm) for lengths up to 18 ft (5.5 m); 3 in. × 6 in. (76 mm × 152 mm) for lengths up to 22 ft (6.7 m); and 3 in. × 8 in (76 mm × 203 mm) for lengths up to 30 ft (9.2 m).

8.7.2.3 The full section of all joists at their ends shall be solidly supported by resting in slots that are cut entirely through the staves or by other means that are approved by the authority having jurisdiction.

8.7.3* Conical Roof.

8.7.3.1 The conical roof shall be supported by 2 in. × 4 in. (51 mm × 102 mm) rafters spaced not over 36 in. (914 mm) apart around the top of the tank.

8.7.3.2 Although the rafter and header type of construction is considered preferable, other types of roof construction shall be acceptable, provided approval of the design is first obtained from the authority having jurisdiction.

8.7.3.3 The roof shall be covered with galvanized iron, at least 60 lb (27 kg) asphalt, asbestos, or equivalent fire-resistive roofing and shall be securely fastened in place.

8.7.3.3.1 Prepared asphalt roofing shall be laid with at least 2½ in. (64 mm) laps, be properly cemented, and use ¾ in. (19.1 mm) galvanized roofing nails with at least ½ in. (12.7 mm) heads and large washers spaced not over 3 in. (76 mm) on centers, or 0.050 in. (1.27 mm) nonferrous staples ½ in. (12.7 mm) in length for 65 lb (30 kg) covering and ¾ in. (19.1 mm) for 90 lb (41 kg) covering.

8.7.4 Roof Anchorage. All parts of the roof and cover shall be securely fastened together and shall be anchored to the tank staves to prevent extreme winds from blowing them loose.

8.7.5 Roof Hatches.

8.7.5.1 A hatch not less than 20 in. × 22 in. (508 mm × 559 mm) shall be built in the conical roof and shall be accessible from the tank ladder.

8.7.5.1.1 The hatch shall be placed high enough on the conical roof that entrance to the flat roof is reasonably easy when the cover for the flat roof hatch is in place.

8.7.5.2 The four sides of the hatch shall be of not less than 1½ in. (38.1 mm) dressed stock and shall be raised not less than 3 in. (76 mm) above the roof boards.

8.7.5.2.1 The top of the hatch cover shall be made of not less than 1 in. (25.4 mm) dressed and matched boards or ⅜ in. (9.5 mm) exterior grade plywood, and shall be covered with the same material as specified for the roof.

8.7.5.2.2 The edges of the hatch cover shall be of not less than 1½ in. (38.1 mm) dressed stock and shall lap down over the raised sides of the hatch.

8.7.5.2.3 The hatch cover shall be arranged to open freely by sliding upward on two ½ in. (12.7 mm) guide rods that are securely bolted to the roof, one on each side of the cover.

8.7.5.2.4 A substantial handle shall be bolted to the lower side of the cover.

8.7.5.3 Other forms of hatch covers shall be acceptable, provided approval is first obtained from the authority having jurisdiction.

8.7.5.4 A hatch of not less than 20 in. × 22 in. (508 mm × 559 mm) shall be built in the flat cover, if provided, and shall be located directly beneath the hatch in the conical roof.

8.7.5.4.1 The hatch cover shall be made of 1 in. (25.4 mm) dressed and matched boards or ⅜ in. (9.5 mm) exterior grade plywood, and shall be of sufficient size to prevent it from falling through the hatch.

8.7.6 Ladders — General.

8.7.6.1 Inside and outside ladders that are arranged for convenient passages from one to the other and through the roof hatch shall be provided.

8.7.6.2 Ladders shall not interfere with the opening of the hatch cover.

8.7.6.3 All ladders exceeding 20 ft (6.1 m) in length shall be equipped with a cage, a rigid notched rail, or other listed ladder safety device.

8.7.7 Outside Ladders.

8.7.7.1 A steel ladder that extends from the balcony to the roof shall be provided on the outside of the tank.

8.7.7.1.1 The sides of the ladder shall extend 18 in. (457 mm) above the top of the tank and downward in an arch to the roof or cover where the ends shall be securely fastened.

8.7.7.1.2 The ladder shall be placed at least 3 ft (0.91 m) to one side of the tower ladder if a balcony is provided. *(See 8.7.9.)*

8.7.7.2 The outside ladder shall have flat side bars of not less than 2 in. × ½ in. (51 mm × 12.7 mm) or 2½ in. × ⅜ in. (64 mm × 9.5 mm), spaced at least 16 in. (406 mm) apart, and shall have at least ¾ in. (19.1 mm) round or square rungs, spaced 12 in. (305 mm) on centers.

8.7.7.2.1 The rungs shall be firmly welded to the side bars. The ladder shall be securely fastened by brackets at a location that is at least 7 in. (178 mm) between the side of the tank and the centerline of the rungs.

8.7.7.2.2 The upper brackets shall be placed not more than 12 in. (305 mm) below the top of the tank staves, and the lower end of the ladder shall be securely fastened to the balcony *(see 8.7.9)*; in the absence of a balcony, the lower end of the ladder shall be fastened to the tower ladder.

8.7.7.2.3 The brackets shall be designed to support a load of 350 lb (159 kg) on the ladder and shall be securely fastened to the tank with through bolts not less than ⅜ in. (9.5 mm) in diameter.

8.7.8 Inside Ladder.

8.7.8.1 A wooden ladder that is made of the same type of wood as the tank shall be provided on the inside of the tank and shall extend from the hatch to the tank bottom with a slope of approximately 10 degrees from the vertical.

8.7.8.2 Inside ladders of up to 16 ft (4.9 m) in height shall have 2 in. × 4 in. (51 mm × 102 mm) side pieces.

8.7.8.2.1 Ladders over 16 ft (4.9 m) shall have 2 in. × 6 in. (51 mm × 152 mm) side pieces.

8.7.8.2.2 All side pieces shall be spaced at least 16 in. (406 mm) apart. Rungs shall be 1¼ in. × 3 in. (32 mm × 76 mm) and spaced 12 in. (305 mm) on centers.

8.7.8.2.3 Rungs shall be securely spiked with noncorrosive nails into slots of not less than ¾ in. (19.1 mm) and shall be not more than 1 in. (25.4 mm) in depth.

8.7.8.2.4 The ladder shall be securely fastened at the upper and lower ends with noncorrosive nails.

8.7.9 Balcony — General.

8.7.9.1 A wooden or steel balcony shall be placed around the base of the tank where the tank bottom is elevated more than 25 ft (7.6 m) above the main building roof.

8.7.9.2 For tanks with a diameter in excess of 15 ft 6 in. (4.7 m), the width of the balcony shall be 24 in. (607 mm) and, for smaller tanks, the width shall be not less than 18 in. (457 mm).

8.7.10 Balcony Floor.

8.7.10.1 Where the balcony is made of wood, the planks shall be at least 2 in. (51 mm) nominal dressed lumber of good quality and shall be spaced ½ in. (12.7 mm) apart.

8.7.10.2 The planks shall be laid crosswise on stringers, or lengthwise on crossbeams, and spaced not over 4 ft (1.2 m) apart.

8.7.10.3 Where the balcony is made of steel, it shall be built of at least ¼ in. (6.4 mm) plate and shall be provided with drain holes.

8.7.11 Balcony Clearance.

8.7.11.1 A clearance of not less than 3 in. (76 mm) nor more than 5 in. (127 mm) at any point shall be provided between the balcony and the tank staves.

8.7.11.2 The clearance in the inside angles of polygonal balconies with plank laid lengthwise shall be limited to a maximum of 5 in. (127 mm) by means of properly supported filler pieces.

8.7.12 Balcony Supports. The balcony supports shall be built of structural steel shapes.

8.7.12.1 Reinforced concrete supports shall be permitted to be used where the tank is located on a concrete tower.

8.7.13 Balcony Railing.

8.7.13.1 A railing of 42 in. (1067 mm) in height shall be placed around the balcony and shall be rigid.

8.7.13.2 The top rail and posts shall be made of not less than 1½ in. pipe or of angle iron not lighter than 2 in. × 2 in. × ⅜ in. (51 mm × 51 mm × 9.5 mm).

8.7.13.3 An intermediate rail shall be provided.

8.7.13.4 The maximum spacing of rail posts shall be 8 ft (2.4 m).

8.7.13.5 The railing shall be designed to withstand a 200 lb (91 kg) load in any direction at any point on the top rail.

8.7.13.6 A toe board shall be provided where needed.

8.7.14 Balcony Opening. Where a hole is cut in the balcony for the tower ladder, it shall be at least 18 in. × 24 in. (457 mm × 607 mm).

8.7.15 Painting Inaccessible Parts. Portions of steelwork that are inaccessible after erection shall be painted before assembly.

8.7.16 Painting. All exterior surfaces shall be cleaned by commercial blasting in accordance with SSPC SP 6, or pickling in accordance with SSPC SP 8, and shall be primed with one coat of lead-free alkyd in accordance with the requirements for "Outside Paint System No. 1" of AWWA D102.

8.7.17 Field Painting — Steelwork.

8.7.17.1 After erection, a patch coat of the same kind of paint as the original coat shall be applied to all steel surfaces where the paint has worn off and shall also be applied to the thoroughly cleaned hoop threads.

Δ **8.7.17.2** Two overall field coats of aluminum or alkyd enamel in a color specified by the purchaser shall be used in accordance with the requirements of AWWA D102. *(See Chapter 5.)*

8.7.17.3 Other finish coats shall be permitted to be used, provided they are compatible with the primer and provided permission is obtained from the authority having jurisdiction.

8.7.18 Painting Application. Paint shall be applied in accordance with Section 5.7.

8.7.19 Preservatives — Woodwork. Exposed wood such as balconies, stringers, and supporting beams shall be provided with at least two coats of a good grade preservative sealer.

8.7.20 Lightning Protection. Lightning protection shall be in accordance with Section 4.9.

Chapter 9 Embankment-Supported Coated Fabric Suction Tanks

Δ **9.1 General.** This section shall apply to the materials, embankment preparation, and installation of embankment-supported coated fabric suction tanks as shown in Table 9.1.

9.2 Standard Capacities. The standard capacities shall be in increments of 100,000 gal to 1,000,000 gal (378.5 m^3 to 3785 m^3).

9.3 Materials.

9.3.1 Construction. The material shall be of a nylon fabric and shall be coated with an elastomer that is compounded to provide abrasion and weather resistance.

9.3.2 Design. The tank shall be designed in accordance with 9.3.2.1 through 9.3.2.3.

9.3.2.1 The tank shall be designed to provide an assembly, with seams, that has a strength equal to or greater than the strength of the basic tank construction.

9.3.2.2 The top surface of the tank shall be coated with a weather-resistant elastomeric paint as recommended by the tank manufacturer.

9.3.2.3 The tank shall be designed to accommodate the field attachment of inlet/outlet fittings during installation.

9.4 Embankment Preparation and Tank Installation Procedure.

9.4.1 Foundation. The embankment and earth base that support the tank shall be installed in accordance with Figure B.1(e).

9.4.1.1 The embankment shall be designed for stability and drainage.

9.4.1.1.1 Where two tanks are installed with a single embankment between tanks, such an embankment shall be designed to resist the load of a full single tank when one tank is drained.

Δ **Table 9.1 Physical Properties of Finished Embankment Tank Assembly**

		Federal Standard 191 Method	ASTM Method	
Weight		5041	ASTM D751	40.5 oz/yd ± 2 oz/yd (0.06 kg/0.84 m^2)
Thickness		5030	ASTM D751	0.042 in. ± 0.003 in. (1.07 mm ± 0.08 mm)
Breaking strength	Warp Fill	5100 5100	ASTM D751 Grab	300 lb (136.2 kg) average 300 lb (136.2 kg) average
Tear strength	Warp Fill	5134 5134	ASTM D2261 Tongue	20 lb (9.1 kg) average 20 lb (9.1 kg) average
Adhesion of coating to fabric: jaw separation speed 12 in. (305 mm)/min		5970	ASTM D751	15 lb/in. (6.8 kg/mm) width, minimum
Puncture resistance			per MIL-T-6396F, 4.5.17	
Parallel to warp				90 lb (40.8 kg) minimum
Parallel to fill				90 lb (40.8 kg) minimum
45 degrees to cords				90 lb (40.8 kg) minimum
Abrasion resistance Wheel — H-22 Weight — 3.5 oz (100 g/wheel)		5306	ASTM D1183 Taber	No fabric showing after 4000 cycles
Blocking resistance		5872		Rating of 1, maximum
Seam strength, 2 in. (51 mm) wide specimen		8311*		No seam slippage

* Federal Test Method Standard 601.

9.4.1.2 A shallow excavation shall be permitted to be made below nominal grade level where allowed by local soil and groundwater conditions permit.

9.4.1.2.1 The removed soil, if suitable, shall be permitted to be used to extend the embankment above grade for the required height (cut and fill method).

9.4.1.3 The internal and external slopes of the embankment shall be 1½ to 1.

9.4.1.3.1 The slope shall be maintained in the original design condition to ensure the integrity of the embankment.

9.4.1.3.2 The soil shall provide a stable embankment.

9.4.1.3.3 Compliance with these requirements shall be subject to verification by a qualified professional soils engineer.

9.4.1.4 The inside corners of the embankment at the intersections of dike walls shall be rounded using a radius of ±1 ft (±0.31 m), approximately, at the bottom and a radius of ±2½ ft (±0.76 m), approximately, at the top of the dike, with uniform gradation from the bottom to the top, as approved by an authorized design or soils engineer.

9.4.1.5 The floor of the embankment shall be graded to locate the inlet/outlet fitting at a minimum distance of 3 in. (76 mm) below the toe of the embankment inside juncture with the floor.

9.4.1.5.1 The grading between the fitting location and all points along the juncture of the sloping side walls and the floor shall be uniform to provide positive drainage.

Δ **9.4.1.6** Earth dike construction tolerances shall be as follows:

(1) ±6 in. (152 mm) for surface variance on the interior slope of the dike walls
(2) +2 percent on a specified vertical dimension for the dike height
(3) ±1 percent on horizontal dimensions specified for the dike length and width where approved by the soils engineer

9.4.1.7 A 6 in. (152 mm) thick layer of fine sand or top soil shall be used for the surface layer of the floor and shall be underlaid by a 3 in. (76 mm) thickness of selected pea gravel to provide a firm, smooth bed and good drainage.

9.4.1.8 The finished surfaces of the inside dike walls and the floor shall be free from sharp rocks and debris.

9.4.1.9 A 4 in. (102 mm) diameter porous drain pipe shall be provided around the perimeter of the floor to ensure positive drainage of melted snow and rainwater from inside the dike.

9.4.1.9.1 The outlet of the pipe also shall serve as a telltale leak detector for the tank.

9.4.1.10 A cement-lined gutter, as shown in Figure B.1(e), shall be provided through the top and down the outside of the end wall nearest the inlet/outlet fitting to provide positive drainage of melted snow and rainwater from the tank top.

9.4.1.11 The exterior sides and top of the dike walls shall be protected against surface erosion.

9.4.2 Installation. Installation of the tank in the prepared embankment shall be accomplished with the assistance of the tank manufacturer's field technician.

9.4.2.1 The tank shall be shipped to the site packaged in a material that is designed for ease of handling by a crane and winch and that facilitates efficient placement in the enclosure.

9.4.2.2 The fittings shall be installed on-site.

9.4.2.3 At the time of installation, the tank shall be filled, and final adjustments on the tank shall be made to ensure that it rests uniformly against the embankment on all four sides.

9.4.2.3.1 Adjustments in anchoring stakes shall be made at this time.

9.4.2.3.2 The stakes shall be installed in accordance with Figure B.1(e).

9.4.2.3.3 The tank shall be secured entirely around the top periphery of the embankment walls using ropes that pass through straps that are built on the outer surface of the tank and that are tied around the stakes.

9.4.2.3.4 This entire operation shall be carried out under the direction of the tank manufacturer's field technician.

9.5 Tank Sump and Support for Bottom Fittings.

9.5.1* Inlet/Outlet. The concrete pad that contains the common inlet/discharge fitting and drain fitting for the tank shall be located near a corner of the embankment floor with the centerline of the inlet/discharge fitting located a minimum of 7 ft (2.1 m) from the bottom edges of the sloping embankment walls.

9.5.2 Finish. The surface of the concrete pad shall be smooth, and the edges shall be rounded.

9.5.2.1 The soil-to-concrete interface around the pad shall have a slight shoulder of sand to support the tank so that the coated-fabric construction of the tank is not abraded on the edge of the concrete.

9.6 Pipe Connections and Fittings.

9.6.1 General Information. The tank fittings, accessories, and piping connections shall be as shown in Figure B.1(f). The fittings attached to the tank shall be of flanged type.

9.6.1.1 All metal parts shall be corrosion resistant.

9.6.2 Fittings Attached to Tank.

9.6.2.1 The tank shall include either one or two access manhole fittings with cover plates in the top surface. A vent pipe with a pressure relief cap shall be attached to each manhole fitting.

9.6.2.2 The fittings that are located in the bottom of the tank shall include a combination inlet/outlet fitting and a drain fitting. Both of these fittings shall be located and secured to the concrete sump in the bottom of the tank.

9.6.2.3 A vortex-plate assembly, as shown in Figure B.1(f), shall be bolted to the combination inlet/outlet fitting.

9.6.2.3.1 The vortex-plate assembly, in addition to controlling vortex flow, shall serve as a guard so that it is possible to pump the calculated water capacity out of the tank at a high rate of flow.

9.6.2.4* An overflow shall be provided and shall be sized for the filling rate or shall be sized 2 in. (51 mm) larger than the fill line.

9.6.3 Water-Level Gauge. The tank shall be provided with a water-level gauge that consists of a sight glass that is constructed of clear acrylic tubing of 2⅜ in. (60 mm) outside diameter.

9.6.3.1 Where subject to freezing, the water gauge assembly shall be installed in the heated pump house.

Chapter 10 Concrete Gravity Tanks and Suction Tanks

10.1 General. The design, materials, and construction of concrete tanks shall conform to ACI 318 and ACI 350R, with water considered as a live load.

10.2 Prestressed Tanks. Prestressed concrete water tanks shall conform to AWWA D110.

10.3 Standard Capacities. This chapter provides requirements for reinforced concrete tanks of 10,000 gal to 500,000 gal (37.85 m^3 to 1892.50 m^3) and prestressed concrete tanks of 10,000 gal to 1,000,000 gal (37.85 m^3 to 3785.00 m^3) net capacity.

10.3.1 Tanks of larger capacities shall be permitted.

10.4 Earthquake Load. Concrete tanks shall meet the requirements for resisting earthquake damage by complying with the earthquake provisions of ACI 350R.

10.4.1 Earthquake requirements for prestressed concrete tanks shall comply with the earthquake provisions of AWWA D110 or AWWA D115, as applicable.

10.5 Wall Treatments. Concrete tank walls shall be made impermeable by means of an impervious membrane or coating that is applied to the interior surface of the tank to prevent visible leakage or seepage through the tank wall.

10.5.1 Tank designs that are not subject to such leakage shall not be required to be made impermeable.

Chapter 11 Fiberglass-Reinforced Plastic Tanks

11.1 General. Fiberglass-reinforced plastic tanks shall be permitted to be used for fire protection systems when installed in accordance with this standard.

11.2* Application. Fiberglass-reinforced plastic tanks shall be permitted only for storage of water at atmospheric pressure.

11.3* Tank Specification. Fiberglass-reinforced plastic tanks shall meet the requirements of AWWA D120 or AWWA D121.

11.4 Monolithic Tanks. Monolithic tanks shall be tested for leakage by the manufacturer prior to shipment.

11.4.1 Tanks that are assembled on site shall be tested for leakage by the manufacturer.

11.5 Protection of Buried Tanks.

11.5.1 Tanks shall be designed to resist the pressure of earth against them.

11.5.2 Tanks shall meet local building code requirements for resisting earthquake damage.

11.5.3 Tanks shall be installed in accordance with the manufacturer's instructions and 11.5.4 through 11.5.13.

11.5.4 Bedding and backfill shall be noncorrosive inert material, of a type recommended by the tank manufacturer, such as crushed stone or pea gravel that is properly compacted.

11.5.5 Tanks shall be set on the minimum depth of bedding, as recommended by the tank manufacturer, that extends 1 ft (0.3 m) beyond the end and sides of the tank.

11.5.6 Tanks shall be located completely below the frost line to protect against freezing.

11.5.7 Where tanks are buried below railroad tracks, the minimum depth of cover shall be 4 ft (1.2 m).

11.5.8 Where the tanks are not subjected to traffic, tanks shall be covered with not less than 12 in. (305 mm) of compacted backfill and topped with up to 18 in. (457 mm) of compacted backfill or with not less than 12 in. (305 mm) of compacted backfill, on top of which shall be placed a slab of reinforced concrete not less than 4 in. (100 mm) thick.

11.5.9 Where tanks are, or are likely to be, subjected to traffic, they shall be protected from vehicles passing over them by at least 36 in. (914 mm) of backfill, or 18 in. (457 mm) of compacted backfill, of a type recommended by the tank manufacturer, plus either 6 in. (152 mm) of reinforced concrete or 9 in. (229 mm) of asphaltic concrete or greater where specified by the tank manufacturer.

11.5.10 Where asphaltic or reinforced concrete paving is used as part of the protection, it shall extend at least 12 in. (305 mm) horizontally beyond the outline of the tank in all directions.

11.5.11 Tanks shall be safeguarded against movement when exposed to high groundwater or floodwater by anchoring with non-metallic straps to a bottom hold-down pad or deadman anchors with fittings built up or protected to prevent corrosion failure over the life of the tank or by securing by other equivalent means using recognized engineering standards.

11.5.12 The depth of cover shall be measured from the top of the tank to the finished grade, and due consideration shall be given to future or final grade and the nature of the soil.

11.5.13 Maximum burial depths, measured from the top of the tank, are established by underground tank manufacturers and independent testing laboratories. Maximum burial depth shall be specified by the tank manufacturer and shall be marked on the tank.

11.6 Protection of Aboveground Tanks

11.6.1 Tanks shall meet local building code requirements for resisting earthquake damage.

11.6.2 Tanks shall be installed in accordance with the manufacturer's instructions and 11.6.3 through 11.6.5.

11.6.3 Fiberglass-reinforced plastic (FRP) tanks located inside a building shall be protected by automatic sprinklers in accordance with ordinary hazard Group 2 occupancies.

11.6.3.1 Where the hazard is greater than OH2, protection shall be in accordance with NFPA 13.

11.6.4 Horizontal fiberglass-reinforced plastic tanks that are greater than 4 ft (1.2 m) in diameter and are positioned 18 in. (457 mm) or greater above finished floor shall be protected in accordance with the obstruction rules of NFPA 13.

11.6.5 Fiberglass tanks installed outdoors shall be protected from freezing and mechanical and UV damage.

11.7 Tank Connections.

11.7.1 Tanks shall have a vent that extends above the ground to prevent against pressurization of the tank during filling and creation of a vacuum during use. Tank venting systems shall be provided with a minimum 2.0 in. (50 mm) nominal inside diameter.

11.7.2* For underground tanks, water level monitoring required by 14.1.8 shall be capable of being read above ground.

11.7.3* Tanks shall have an accessible method of filling the tank above ground.

11.7.4* Tanks that are used as cisterns for providing fire flow to fire department apparatus shall have a dry hydrant assembly with threads acceptable to the authority having jurisdiction.

11.7.5 Tanks used as cisterns for providing fire flow to fire department apparatus shall be located such that the lowest water in the tank used for fire protection is not more than 15 ft (4.6 m) below the grade where the fire department apparatus will site to extract water from the tank.

Chapter 12 Tank and Tower Foundations in the Ground

12.1 Concrete Specifications. Concrete foundations and footings shall be built of concrete with a specified compressive strength of not less than 3000 psi (20.69 MPa). Design, materials, and construction shall conform to ACI 318, with water considered as a live load.

12.2 Suction Tank Foundations.

12.2.1 Except as allowed by 12.2.2.4, suction tanks shall be set on a concrete slab foundation or a concrete ringwall foundation with a cushion of sand, compacted crushed stone, or granular base.

12.2.1.1 When a suction tank is set on a concrete ringwall foundation with a cushion of sand, at least 3 in. (76.2 mm) of clean, dry sand, laid on the compacted grade, shall be provided at the finished tank grade and shall slope up toward the center of the tank at the rate of 1 in. in 10 ft (25.4 mm in 3 m).

12.2.1.2 For suction tanks set on concrete foundations, the junction of the tank bottom and the top of the concrete foundation shall be tightly sealed to prevent water from entering the base.

12.2.1.3 For tanks supported on concrete slab foundations, a sand cushion at least 1 in. (25.4 mm) thick or a ½ in. (12.7 mm) cane fiber joint filler that complies with ASTM D1751 shall be provided between the flat bottom and the foun-

dation. Where a starter ring that is installed in accordance with AWWA D103 is embedded in a concrete slab floor, the sand cushion and cane fiber joint filler shall not be required.

12.2.1.4 Embankment-supported coated fabric suction tank foundations shall comply with Section 9.4.

12.2.2 For ringwall foundations, a minimum 10 in. (254 mm) wide reinforced concrete ring wall that extends below the frost line and at least 1.0 ft (0.30 m) below finished grade shall be placed directly beneath the tank shell where tanks are supported on a cushion of sand, on crushed stone, or granular bases.

12.2.2.1 The ring shall project at least 6 in. (152 mm) to a maximum of 12 in. (300 mm) above the surrounding grade and shall be reinforced against temperature and shrinkage and shall be reinforced to resist the lateral pressure of the confined fill with its surcharge.

12.2.2.2 The minimum reinforcement shall conform to Chapter 14, Section 14.3 of ACI 318.

12.2.2.3 The tops of ring wall foundations shall be level within ±⅛ in. (±3.2 mm) in one plate length [approximately 34 ft (10.4 m)], and no two points on the wall shall differ by more than ±¼ in. (±6.4 mm).

12.2.2.4 In lieu of a concrete foundation, steel suction tanks of 4000 gal (15.1 m^3) or less shall be permitted to be supported on granular berms, with or without steel retainer rings, in accordance with AWWA D100 or AWWA D103, as applicable.

12.2.3 Where soil does not provide direct support for the tank without excessive settlement, shallow foundation construction shall not be adequate, and a proper foundation shall be designed by a foundation engineer.

12.3 Foundation Piers for Elevated Tanks.

12.3.1 The tops of foundation piers shall be level, shall be at least 6 in. (152 mm) above grade, and shall be located at the correct elevations.

12.3.2 The bottom of foundations shall be located below the frost line or at least 4 ft (1.2 m) below grade, whichever is greater.

12.3.3 Pier foundations shall be of any suitable shape and shall be of either plain or reinforced concrete.

12.3.3.1 Where the pier foundation supports a tower, the center of gravity of the pier shall lie in the continued center of the gravity line of the tower column, or it shall be designed for the eccentricity.

12.3.3.2 The top surface shall extend at least 3 in. (76 mm) beyond the bearing plates on all sides and shall be chamfered at the edge.

12.4 Anchorage.

12.4.1 The weight of the piers shall be sufficient to resist the maximum net uplift that occurs when the tank is empty and wind loads are on the structure, as specified in previous sections.

12.4.1.1 The wind shall be considered to be blowing from any direction.

12.4.1.2 The weight of earth located vertically above the base of the pier shall be permitted to be included.

12.4.2 Anchor bolts shall be arranged to securely engage a weight at least equal to the net uplift when the tank is empty and the wind is blowing from any direction.

12.4.2.1 The lower ends of the anchor bolts shall terminate in a head, nut, washer plate, or u-bolt.

12.4.2.2 Design of the anchor embedment strength shall be in accordance with ACI 318.

12.4.3 Anchor bolts shall be accurately located with sufficient free length of thread to fully engage their nuts.

12.4.3.1 Expansion bolts shall not be acceptable.

12.4.3.2 Anchor bolts and nuts that are exposed to weather, water, or corrosive environments shall be protected by one of the following methods:

(1) Galvanizing
(2) Corrosion-resistant alloys
(3) Field-applied coating after installation

12.4.3.3 Except as provided in 12.4.3.3.1, the minimum size of anchor bolts shall be 1¼ in. (32 mm).

12.4.3.3.1 Anchor bolts and nuts less than 32 mm (1¼ in.) in diameter, but not less than ¾ in. (19.1 mm) in diameter, shall be permitted to be used, provided they are protected in accordance with 12.4.3.2(1) or 12.4.3.2(2).

12.5 Grouting. Bearing plates or base plates shall have complete bearing on the foundation or shall be laid on 1 in. (25.4 mm) minimum thickness cement grout to secure a complete bearing.

12.6 Soil-Bearing Pressures.

12.6.1 The design soil-bearing pressure and the corresponding depth of foundation shall be determined by subsurface investigation and by a review of foundation experience in the vicinity.

12.6.1.1* Such an investigation shall include test borings made by or under the supervision of an experienced soils engineer or soils testing laboratory and to the depth necessary to determine the adequacy of support.

12.6.2 Where the presence of limestone or other soluble rock types are suspected, subsurface investigation shall include cavity investigation and competency of bedrock.

12.6.2.1 The potential for subsidence, collapse, soil liquefaction, and settlement shall be evaluated.

12.6.3 The design soil-bearing pressure shall not exceed a pressure that can cause settlements that impair the structural integrity of the tank.

12.6.4 Foundations shall not be constructed over buried pipes or immediately adjacent to existing or former deep excavations.

12.6.4.1 This requirement shall not apply where foundation bases extend below the excavation.

12.6.5 The design soil-bearing pressure shall provide for a factor of safety of 3 based on the calculated ultimate bearing capacity of the soil for all direct vertical loads, including wind moment load on the columns.

12.6.5.1 The factor of safety shall not be less than 2 when considering the toe pressure for the direct vertical loads, plus the overturning moment caused by wind shear at the tops of individual piers.

Chapter 13 Steel Tank Towers

13.1 General.

13.1.1* This section shall define the design, fabrication, and erection of steel towers to support water tanks.

13.1.2 Height. The height of the tower shall be the vertical distance from the top of the foundation to the bottom capacity line of the tank.

13.1.3 Strength.

13.1.3.1 The material specified shall be without defects that affect the strength or service of the structure.

13.1.3.2 The workmanship shall be of such quality that defects or injuries are not produced during manufacture or erection.

13.1.3.3 The unit stresses specified shall not be exceeded.

13.1.3.4 The structures and their details shall possess the requisite strength and rigidity.

13.1.4 Details. The details shall comply with the requirements of this chapter and, where not covered herein, to AWS D1.1/D1.1M.

13.2 Materials.

13.2.1 Plates, Shapes, and Tubular Columns.

13.2.1.1 Plates. Plate materials shall be of open-hearth, electric furnace, or basic oxygen process steel that conforms to the following:

(1) ASTM A36/A36M
(2) ASTM A283/A283M, Grades A, B, C, and D

13.2.1.1.1 Where plates of thicknesses greater than ¾ in. (19.1 mm) are used, ASTM A283/A283M, Grade D, shall not be used. ASTM A131/A131M, Grades A, B, and C; ASTM A285/A285M, Grades A, B, and C; or ASTM A516/A516M, Grades 55 and 60, shall be permitted to be used as alternatives.

13.2.1.2 Shapes. Structural materials shall be open-hearth, electric furnace, or basic oxygen process steel that conforms to ASTM A36/A36M; ASTM A131/A131M, Grade A, B, or C; or ASTM A992/A992M.

13.2.1.2.1 Copper-bearing steel that contains approximately 0.20 percent copper shall be used.

13.2.1.2.2 In all other respects, steel shall conform to the specifications of 13.2.1.1 and 13.2.1.2.

13.2.1.3 Tubular Columns. Steel pipe shall be permitted to be used for tubular columns or other structural members, provided it complies with ASTM A53/A53M, Type E or Type S, Grade B; ASTM A139/A139M, Grade B; and API SPEC 5L, Grade B, and provided the minimum wall thickness complies with the design requirements and the minimum thickness requirement of this standard.

13.2.1.3.1 The allowable underrun shall be subtracted from the nominal wall thickness when calculating the minimum pipe wall thickness.

13.2.1.3.2 Tubular sections shall not be flattened to form end connections.

13.2.2 Bolts, Anchor Bolts, and Rods.

13.2.2.1 Bolts and anchor bolts shall conform to ASTM A307, Grade A or Grade B. ASTM A36/A36M shall be considered an acceptable alternative material for anchor bolts.

13.2.2.2 Rods shall be open hearth, electric furnace, or basic oxygen process steel that conforms to ASTM A36/A36M.

13.2.3 Pins.

13.2.3.1 Pins shall comply with any of the following:

(1) ASTM A36/A36M
(2) ASTM A108, Grade 1018 or Grade 1025
(3) ASTM A307, Grade A or Grade B

13.2.3.2 Size and diameter tolerances of turned pins shall be equal to that of cold-finished shafting. The surface finish shall depend on the application but shall not be rougher than 125 micro-in. (3.18 μm).

13.2.4 National Standards. Materials produced and tested in accordance with the requirements of a recognized national standard and within the mechanical (strength), metallurgical, and chemical limitations of one of the material grades specified in this section shall be acceptable where approved by the authority having jurisdiction.

13.3 Loads.

13.3.1 Dead Load.

13.3.1.1 The dead load shall be the estimated weight of all permanent construction and fittings.

13.3.1.2 The unit weight of steel shall be considered to be 490 lb/ft^3 (7849 kg/m^3), and the unit weight of concrete shall be considered to be 144 lb/ft^3 (2307 kg/m^3).

13.3.2 Live Load.

13.3.2.1 Under normal conditions, the live load shall be the weight of all the liquid when it overflows the top of the tank.

13.3.2.2 The unit weight of water shall be considered to be 62.4 lb/ft^3 (1000 kg/m^3).

13.3.2.3 Proper provision shall be made for temporary stresses during erection.

13.3.2.4 Where roofs have a slope of less than 30 degrees, they shall be designed to support a uniform weight of 25 lb/ft^2 (122 kg/m^2) on the horizontal projection.

13.3.3 Live Load — Large Tank Risers.

13.3.3.1 The water located directly above any tank riser shall not be considered to be carried by the tower columns.

13.3.3.1.1 Such water shall be considered to be carried by the tower columns where the tank riser is suspended from the tank bottom or from the tower columns.

13.3.3.2 If a hemispherical or ellipsoidal tank bottom is rigidly attached to the top of a large tank riser by a flat horizontal

diaphragm plate and the tank riser is supported by a separate solid foundation or is suspended from the tower, the tank riser plate shall be considered as supporting the water load in a hollow cylinder having an outside radius equal to the radius of the tank riser at the tank bottom plus one-half the distance from the edge of the tank riser to the connection of the flat horizontal diaphragm plate to the hemispherical or ellipsoidal bottom plates.

13.3.3.2.1 The inside radius of the hollow cylinder shall be considered to be equal to the radius of the tank riser at the tank bottom.

13.3.3.2.2 The load shall be deducted from the weight of the tank water when designing the tower.

13.3.3.2.3 The load shall not be required to be deducted from the weight of the tank water where the tank riser is suspended from the tower.

13.3.3.3 If a hemispherical or ellipsoidal shape is continuous to the shell of a large tank riser without a flat horizontal diaphragm plate and the tank riser is supported by a separate solid foundation or is suspended from the tower, the tank riser plate shall be designed to carry the water load of a hollow cylinder that extends from the bottom of the tank to the top of the tank.

13.3.3.3.1 The outside radius of the hollow cylinder shall be assumed to be 2 ft (0.61 m) greater than, and the inside radius shall be assumed to be equal to, the radius of the tank riser shell at the tank bottom.

13.3.3.3.2 The load shall not be deducted from the tank water load when designing the tank and tower.

13.3.3.3.3 The load shall be permitted to be deducted for the tower design of tanks with ellipsoidal bottoms of a flat shape at the connection to tank risers supported by a separate solid foundation.

13.3.3.4 If the tank bottom is a torus shape, the tank riser plate shall be designed to carry the weight of all water in the tank between a cylinder that intersects the bottom at its lowest elevation and a cylinder that is equal to the diameter of the tank riser.

13.3.3.4.1 The load shall be deducted from the weight of the tank water when designing the tower.

13.3.4 Wind Load.

13.3.4.1 The wind pressure shall be assumed to be 30 lb/ft^2 (147 kg/m^2) on a vertical plane surface.

13.3.4.2 In calculating the wind load on a cylindrical surface, 18 lb/ft^2 (88 kg/m^2) shall be applied to the total area of the vertical projection, and the point of application of the load shall be at the center of gravity of the projected area.

13.3.4.3 The load on the tower shall be assumed to be concentrated at the panel points.

13.3.4.4 When designing for wind velocities over 100 mph (161 km/hr), all of these specified unit pressures shall be adjusted in proportion to the square of the velocity, assuming that the pressures are for velocities of 100 mph (161 km/hr).

13.3.5 Balcony and Ladder Loads.

13.3.5.1 A vertical load of 1000 lb (454 kg) shall be assumed to be applied to any 10 ft^2 (0.93 m^2) of area on the balcony floor and on each platform; 500 lb (227 kg) shall be assumed to be applied to any 10 ft^2 (0.93 m^2) of area on the tank roof; and 350 lb (159 kg) shall be assumed to be applied to each vertical section of ladder.

13.3.5.2 All structural parts and connections shall be designed to withstand such loads.

13.3.5.3 The loadings specified shall not be combined with snow loading.

13.3.6 Earthquake Load. Tank towers shall meet the requirements for resisting earthquake damage by complying with the earthquake design load provisions of AWWA D100 and 13.4.7.2.

13.4 Unit Stresses.

13.4.1 General. The maximum stresses in pounds per square inch (megapascals) produced by the loads specified in Section 13.3 shall not exceed the values specified in Table 13.4.1 and Table 13.4.3 through Table 13.4.5.

13.4.2 Slenderness Ratio. The maximum permissible slenderness ratio, L/r, for compression members that carry the weight or pressure of the tank contents shall be 120.

13.4.2.1 The maximum permissible slenderness ratio, L/r, for compression members that carry the loads from wind and earthquake only shall be 175.

13.4.2.2 The maximum permissible slenderness ratio, L/r, for columns that carry roof loads only shall be 175.

13.4.3 Bending. Table 13.4.3 shall be used for bending requirements.

13.4.4 Shearing. Table 13.4.4 shall be used to determine maximum shear stress requirements.

13.4.5 Bearing. Table 13.4.5 shall be used to determine maximum bearing stress.

13.4.6 Combined Stresses. Members subject to both axial and bending stresses shall be so proportioned that the sum of the stresses at the critical point does not exceed the allowed axial stress.

13.4.7 Wind and Earthquake Allowances.

13.4.7.1 Wind.

13.4.7.1.1 For stresses due to a combination of dead load, live load, and wind load as specified in this standard, and for stresses due to wind load alone, the working stresses specified in Table 13.4.1 and Table 13.4.3 through Table 13.4.5 shall be permitted to be increased a maximum of 33⅓ percent.

13.4.7.1.2 In no case shall the resulting stresses be less than those required for dead and live loads alone.

13.4.7.2 Earthquake.

13.4.7.2.1 For stresses due to a combination of dead load, live load, and earthquake load as specified in this standard, and for earthquake load alone, the working stresses of Table 13.4.1 and Table 13.4.3 through Table 13.4.5 shall be permitted to be increased up to 33⅓ percent.

Table 13.4.1 Allowable Unit Stress

Axial Tension: On net section, rods, and ASTM A36/A36M structural steel shapes 15,000 psi (1034 bar)

Axial Compression: Gross section of columns and struts of structural shapes:

$$\frac{P}{A} = \left(1 + \frac{\frac{18{,}000}{L^2}}{18{,}000\ r^2}\right) \text{ or 15,000 psi (1034 bar), whichever is smaller}$$

For tubular columns and struts:

$$\frac{P}{A} = XY, \text{ where } X = 1 + \left(\frac{\frac{18{,}000}{L^2}}{18{,}000\ r^2}\right) \text{ or 15,000 psi (1034 bar), whichever is smaller, and}$$

(1) $Y = \left(\frac{2}{3}\right)\left(100\frac{t}{R}\right)\left[\left(2 - \frac{2}{3}\right)\left(10\frac{t}{R}\right)\right]$

(2) $Y =$ unity (1.00) for values of $\frac{t}{R}$ equal to or greater than 0.015

where:

P = total axial load [lb (kg)]
A = cross-sectional area [in.^{2}(mm^2)]
L = effective length [in. (mm)]
r = least radius of gyration [in. (mm)]
R = radius of tubular member to the exterior surface [in. (mm)]
t = thickness of tubular member (in.); minimum allowable thickness — ¼ in. (6.38 mm)

All circumferential joints in tubular sections shall be butt joints welded for complete penetration.

Compression on short lengths — 18,000 psi (124.11 MPa) *(see 13.5.5)*.

Table 13.4.3 Maximum Bending Stress

	psi	MPa
Tension on extreme fibers, except column base plates	15,000	103.43
Column base plates	20,000	137.90
Compression on extreme fibers of rolled sections, and plate girders and built-up members for values of:		
$\frac{ld}{bt}$ not in excess of 600	15,000	103.43
$\frac{ld}{bt}$ in excess of 600	9,000,000	62,055
	$\frac{ld}{bt}$	$\frac{ld}{bt}$

where l is the unsupported length; d is the depth of the member; b is the width; and t is the thickness of its compression flange, all in in. (mm); except that l shall be assumed to be twice the length of the compression flange of a cantilever beam not fully stayed at its outer end against translation or rotation.

Pins, extreme fiber	22,500	155.14
Cast steel	11,250	77.57

Table 13.4.4 Maximum Shear Stress

	psi	MPa
Pins and turned bolts in reamed or drilled holes	11,250	77.57
Unfinished bolts	7,500	51.71
Webs of beams and plate girders, gross section	9,750	67.23
Cast steel	7,325	50.51
Tank plates and structural connection materials	11,250	77.57

13.4.7.2.2 In no case shall the resulting stresses be less than those required for dead and live loads alone.

13.4.7.3 Wind and earthquake shall not be required to be considered as acting simultaneously.

13.4.8 Fillet and Groove Welds. Welded joints shall be proportioned so that the loads specified in Section 13.3 shall not cause stresses therein in excess of the design stresses obtained by applying the efficiencies in AWWA D100 to the allowable working stresses in the base material.

13.5 Details of Design.

13.5.1 Sections.

13.5.1.1 Sections shall be symmetrical.

13.5.1.2 Members shall be built of standard structural shapes or of tubular sections.

13.5.1.3 Structural shapes shall be designed with open sections to allow painting of all surfaces exposed to air or moisture and subject to corrosion.

13.5.1.4 Tubular sections of columns and struts shall be airtight.

13.5.2 Minimum Thickness — General.

13.5.2.1 The minimum thickness of metal shall be ¼ in. (6.4 mm).

13.5.2.2 The minimum size of sway rods shall be ¾ in. (19.1 mm).

13.5.2.3 The requirements for minimum thickness of metal shall not apply to the webs of channels and I-beams and to minor parts that carry no load.

13.5.3 Columns.

13.5.3.1 Splices.

13.5.3.1.1 Column splices shall be designed to withstand the maximum possible uplift or at least 25 percent of the maximum compression, whichever is greater.

13.5.3.1.2 The abutting joints of welded tubular columns shall be either butt welded with a backer strip or spliced by plates welded to both sections that are being joined.

13.5.3.1.3 Where a horizontal plate of ¼ in. (6.4 mm) minimum thickness is used to seal the top and bottom of a column section, the backing strip or splice plate shall be omitted.

13.5.3.2 Strength of Diaphragm in Tubular Columns.

13.5.3.2.1 A diaphragm or equivalent means of resistance to local tube distortion shall be provided at all panel points, at points of concentrated loading, and at the top diagonal wind rod connections.

13.5.3.2.2 Where a horizontal plate [minimum thickness of ¼ in. (6.4 mm)] is used to seal the top or bottom of a column section, or both, and is located within 18 in. (457 mm) of the panel point, a diaphragm plate shall not be required.

13.5.4 Combined Shapes.

13.5.4.1 Combined shapes shall be separated by at least ⅜ in. (9.5 mm) if they are not in contact.

13.5.4.2 For tension members with component parts that are separated by spacers, the spacers shall not be over 3 ft 6 in. (1.07 m) apart and shall be attached by welding or bolting.

13.5.5 Starred Angles.

13.5.5.1 Compression members that are built of two angles in a star section shall have pairs of tie plates or angles spaced not over 20 in. (0.51 m) on center for 3 in. (76 mm) angles; 24 in. (0.61 m) for 4 in. (102 mm) angles; 36 in. (0.91 m) for 5 in. (127 mm) angles; 42 in. (1.07 m) for 6 in. (152 mm) angles; and 48 in. (1.22 m) for 8 in. (203 mm) angles.

Table 13.4.5 Maximum Bearing Stresses

	Double Shear		Single Shear	
	psi	MPa	psi	MPa
Turned bolts in reamed or drilled holes	30,000	206.85	24,000	165.48
Unfinished bolts	18,750	129.28	15,000	103.43
Pins		24,000	165.48	
Contact area of milled surfaces		22,500	155.14	
Contact area of fitted stiffeners		20,250	139.62	
Expansion rollers and rockers [lb/linear in. (kg/linear mm)] where *d* is the diameter of roller or rocker (in.)			600*(d)*	0.163*(d)*

13.5.5.2 The tie plates or angles shall be connected to each of the angles of the compression members by not less than two bolts, and at least three bolts shall be used in 6 in. (152 mm) or 8 in. (203 mm) angles.

13.5.5.3 Equivalent welded tie plates shall be permitted to be used.

13.5.6 Connections — General.

13.5.6.1 The strength of connections shall be sufficient to transmit the full stress in the member.

13.5.6.2 A group of bolts that is located at the end of any member that transmits stress into that member shall have its center of gravity in the line of the center of gravity of the member, or provisions shall be made for the effect of the resulting eccentricity.

13.5.6.3 Connections between the columns, struts, and tension members shall be made by gusset plates that can also serve as splice plates.

13.5.6.4 Diagonal bracing shall, where possible, be connected to the same gusset plates that connect the columns and struts.

13.5.6.5 Bolts shall not be subjected to tensile stress.

13.5.7 Pins.

13.5.7.1 Adjustable tension members shall be connected to gusset plates by finished or cold-rolled steel pins.

13.5.7.2 Pins shall be headed on one end and threaded on the other, threaded on both ends, or plain on both ends with washers welded onto the ends.

13.5.7.3 Threaded ends shall be fitted with nuts, and the threads shall be burred outside the nuts to prevent easy removal of the nuts.

13.5.8 Net Area of Pin-Plate. The net area of the gusset-plate section ahead of a clevis pin shall not be less than 62.5 percent of the net area of the tension member.

13.5.9 Clevises, Forked Ends, and Turnbuckles.

13.5.9.1 Bar or plate clevises, forged clevis nuts, or forked ends shall be used to connect adjustable tension members to the clevis pins.

13.5.9.1.1 The strength of clevises shall not be less than that of the tension member.

13.5.9.1.2 The minimum sectional area through forked ends shall not be less than the area of the tension member at its smallest section.

13.5.9.2 Clevis plates shall be fusion-welded to wind rods.

13.5.9.2.1 There shall be two plates at each end of the rod.

13.5.9.2.2 The plates shall be symmetrical.

13.5.9.2.3 There shall be no open spaces between the rod and the clevis plates.

13.5.9.2.4 The plates shall be bent in easy lines to reduce the stretch under the load to a minimum, or they shall be flat with filler plates on the pin.

13.5.9.2.5 In all cases, the clevis pin shall be designed to carry the maximum stresses, including bending, without overstressing.

13.5.9.3 Turnbuckles shall be of the open type and shall have a strength of not less than that of the tension member.

13.5.10 Tank Connection.

13.5.10.1 The center of gravity lines of the column circular girder and the lowest plate of the tank cylinder shall meet at a point, or the columns shall be designed for the eccentricity.

13.5.10.2 The combined axial and bending stress in the detail that connects the top of the column to the tank plate shall not be more than 33⅓ percent in excess of the allowable axial working stress, which, in the case of compression, is that stress permitted for short lengths.

13.5.11 Tie Plates. The main constituent parts of columns shall be solidly tied together at the points of connection of tension or compression members.

13.5.12 Length of Tension Members. The horizontal projection of the unsupported length in inches (millimeters) of a nonadjustable tension member in a horizontal or inclined position shall not exceed 200 times the radius of gyration about the horizontal axis.

13.5.13 Column Bases and Caps.

13.5.13.1 Columns shall have bases built of steel plates and structural shapes.

13.5.13.2 The lower end of each column shall be faced and shall bear fully on the base plate, or it shall have sufficient welding to transmit loads to the base plate.

13.5.13.3 The base plate and anchor bolt connections to the column shall be designed to load the foundation uniformly and also to transmit the net uplift from the column when subjected to the greatest possible wind stress to the foundation when the tank is empty.

13.5.13.4 Footings either shall be designed without pockets or shall be filled with concrete and flashed with asphalt to prevent the collection of dirt and moisture inside.

13.5.13.5 Where the tower supports a flat-bottom tank, the columns shall have steel caps that are designed to transmit the load from the grillage beams concentrically to the columns.

13.5.13.5.1 The upper ends of the columns shall be faced and shall bear fully on the cap plates, or they shall have sufficient welding to transmit all loads to the top plate.

13.5.13.5.2 If the batter of columns exceeds 1.8 in. (46 mm) horizontal to 12 in. (305 mm) vertical, rigid ties shall be provided between the column bases.

13.5.14 Circular Girder with Inclined Columns.

13.5.14.1 Tops of inclined columns shall be connected by a continuous, horizontal circular girder where the tank bottom is suspended.

13.5.14.2 The outer flange shall be symmetrical about the web plate, but, if eccentric, the allowable working stresses for the flanges shall be reduced by 25 percent.

13.5.14.3 The bending moment shall be considered to be carried entirely by the flanges, the shear to be carried by the

web, and the compression to be carried by the flanges and web in proportion to their areas at the section considered.

13.5.14.4 Splices shall be designed to transmit the load in the spliced member.

13.5.14.5 The horizontal component of the maximum column load shall be transmitted to the girder by welding.

13.5.14.6 The circular girder shall be permitted to be used as a balcony.

13.5.14.7 Drain holes shall be provided in the web plate.

13.5.15 Circular Girder with Vertical Columns. Where the columns are vertical and the tank bottom is suspended, the circular girder shall be as specified in 13.5.14, or it shall be a structural shape that is connected to the tank by welding.

13.5.16 Interior Bracing.

13.5.16.1 The use of bracing inside the tank shall be avoided if possible but, if used, an additional thickness of 1/16 in. (1.6 mm) shall be added to the calculated sections to provide for corrosion.

13.5.16.2 The sections shall be open to facilitate cleaning and painting.

13.5.17 Top Struts. The thrust from battered columns that support a flat-bottom tank shall be resisted by struts that are connected to the extreme top of the columns or to the cap plates on all sides of the tower.

13.5.18 Grillage.

13.5.18.1 Where the tower supports a flat-bottom tank, all of the supporting beams shall be of steel and shall be welded or bolted to the post cap girders.

13.5.18.2 The latter shall be either welded or bolted to the column caps and shall be braced to prevent overturning.

13.5.18.3 The load on the outside grillage beams shall be considered as increasing from zero at the ends to a maximum at the center.

13.5.19 Base Braces.

13.5.19.1 Where the tower is supported by a building, insecure earth, or foundations that extend more than approximately 1 ft (0.3 m) above grade, rigid members shall be placed between the adjacent column bases or foundations.

13.5.19.2 Rigid members shall be provided between adjacent column bases where the columns are welded to the base plates and the batter exceeds 1.8 horizontal to 12 vertical.

13.5.20 Web Stiffeners.

13.5.20.1 Web stiffeners shall be provided at points of concentrated loading on beams and girders where necessary to prevent the buckling of webs.

13.5.20.2 Web stiffeners shall be designed in accordance with the specifications of the American Institute of Steel Construction.

13.5.21 Large Tank Risers, Water Spheres.

13.5.21.1 Large steel-plate pipes of 3 ft (0.91 m) or more in diameter shall be designed to withstand stress caused by the weight or pressure of the tank and tank riser contents and by the weight of the load imposed on the top of the tank riser pipe by the tank bottom or by members that support the tank bottom, as specified in 13.3.3.2.

13.5.21.2 Where the design of the tank riser plates is controlled by hoop tension, 0.3 of the compressive stress in the vertical direction shall be added to the total calculated tensile stress in the horizontal direction when determining the thickness of the tank riser plates.

13.5.21.3 If the design of the tank riser plates is controlled by vertical compression, 0.3 of the tensile stress in the horizontal direction shall be added to the total calculated compressive stress in the vertical direction where applying the formula in Table 13.4.1.

13.5.21.4 The thickness of the bottom ring of the steel plate shall be sufficient to ensure that the specified unit stresses are not exceeded where combined with bending or other stress around the manhole or other openings.

13.5.21.5 When determining the design of water spheres and conical frustums at the base of the sphere, the symbol *R*, which represents the radius in Table 13.4.1, shall be taken as either the radius of the sphere or the radius of the cone that is perpendicular to the conical surface.

13.5.21.6 The surface of the conical frustum that supports the sphere shall not be inclined to the horizontal at an angle of less than 30 degrees.

13.5.21.6.1 If compression reinforcement is needed at the junction of the conical frustum and the tubular support, the effective width, in in. (mm), of each plate at the joint that can be considered as contributing to the reinforcement shall be limited to the square root of the product of each plate thickness, in in. (mm), and to its respective inside radius, in in. (mm).

13.5.22 Anchor Bolts. There shall be at least two anchor bolts per column in locations that are subject to earthquakes.

13.6 Workmanship.

13.6.1 Shearing. All shearing shall be performed neatly.

13.6.1.1 Material that is over 3/4 in. (19.1 mm) thick shall have 1/8 in. (3.2 mm) planed from the sheared edges.

13.6.1.2 Base plates or other plates that do not carry actual stress shall not be required to be planed if thicker than 3/4 in. (19.1 mm).

13.6.2 Straightening and Fitting. The pieces that form built sections shall be straight and shall fit closely together.

13.6.3 Use of Bolts and Welding.

13.6.3.1 Members shall be welded throughout.

13.6.3.2 Field connections of nonadjustable tension members that carry wind stress only and compression members and grillages in towers that support tanks of 30,000 gal (113.55 m^3) or less capacity shall use unfinished bolts.

13.6.3.3 The threads of unfinished bolts shall be burred outside of the nuts.

13.6.3.4 High-tensile bolts or the equivalent shall be used in field connections of towers that support tanks of 100,000 gal (378.50 m^3) or less capacity.

13.6.3.5 Where machined bolts are needed, the bolt holes shall be reamed parallel and the bolts shall be machined to a driving fit with the threads burred outside the nuts.

13.6.3.5.1 Where special listed locking devices are provided, the requirements for machined bolts and bolt holes shall not apply.

13.6.4 Threads and Nuts.

13.6.4.1 Screw threads on rods shall be cut or rolled to the U.S. Standard, or screw threads shall be self-locking and shall make tight fits in nuts and turnbuckles.

13.6.4.2 All threads and nuts in turnbuckles shall be engaged.

13.6.4.3 Machined bolts shall have threads that are located entirely outside the holes, and washers not less than ⅛ in. (3.2 mm) thick shall be used under the nuts.

13.6.4.4 Nuts on all bolts shall be drawn tight, and the threads shall be burred outside the nuts.

13.6.5 Grouting of Base Plates.

13.6.5.1 During field erection, tower columns shall be built on thin metal wedges that, after completion of the structure, shall be driven to equal resistance so that all columns are loaded equally.

13.6.5.2 The spaces beneath the base plates and the anchor bolt holes shall be completely filled with portland cement mortar that consists of a minimum of one part portland cement to three parts clean sand.

13.6.6 Assembly.

13.6.6.1 The component parts of built-up members shall be held in firm contact by adequate clamps or other means.

13.6.6.2 Spaces where inaccessible corrosion can form shall not be left between the component parts of members.

13.6.6.3 Erection bolts or other positive devices that impart sufficient strength and stiffness to resist all temporary weights and lateral loads, including wind, shall be used for temporarily fastening the members and bracing the framework.

13.6.7 Alignment. Members and all component parts shall be straight and free from appreciable buckles or warping.

13.6.8 Tubular Column Distortion.

13.6.8.1 The column axis shall not deviate from a straight line by more than $1/1000$ of the laterally unsupported length.

13.6.8.2 The difference between the maximum and minimum outside diameters shall not exceed 2 percent of the nominal outside diameter at any cross section.

13.6.8.3 Local dents shall be no deeper than the plate thickness.

13.7 Accessories.

13.7.1 Connections. Connections shall be provided on the tower for the necessary pipe and frostproof casing braces.

13.7.2 Ladders — General.

13.7.2.1 A steel ladder shall be placed on one of the tower columns extending from a point within easy reach of the ground to the balcony around the tank or to the revolving tank ladder.

13.7.2.2 The ladder shall not incline outward from the vertical at any point.

13.7.2.3 Where the tower supports a wood tank or where the balcony is not used as a circular girder, the ladder shall pass through an opening in the balcony of not less than 18 in. × 24 in. (457 mm × 609 mm) in the clear.

13.7.2.4 The ladder shall be securely fastened at its upper end.

13.7.2.5 Welding of ladders and their connections shall be permitted. Ladders for pedestal-supported tanks shall be placed inside the pedestal.

13.7.3 Ladders — Details.

13.7.3.1 The ladder shall have not less than 2 in. × ½ in. (51 mm × 12.7 mm) or 2½ in. × ⅜ in. (64 mm × 9.5 mm) flat side bars spaced at least 16 in. (406 mm) apart and shall have at least ¾ in. (19.1 mm) round or square rungs, spaced 12 in. (305 mm) on centers.

13.7.3.2 The rungs shall be firmly welded to the side bars.

13.7.3.3 The sections of the ladder shall be connected by lap or butt joints.

13.7.3.4 Where joints are bolted, at least two ½ in. (12.7 mm) bolts shall be used on each side of each splice.

13.7.3.5 The ladder shall be connected to the tower column or the pedestal support at least 7 in. (178 mm) between the column and the centerline of the rungs by means of flat bar brackets spaced not over 12 ft (3.7 m) apart.

13.7.3.5.1 The brackets shall be rigidly connected to the column and designed to support a load of 350 lb (159 kg) on the ladder.

13.7.3.5.2 All ladders shall be equipped with a cage, a rigid notched rail, or other listed ladder safety device.

13.7.3.6 Other arrangements of tower ladders shall be permitted, provided approval is first obtained from the authority having jurisdiction.

13.7.3.6.1 Such arrangements shall not be permitted unless made necessary by a special design of tower, and with distances greater than 12 ft (3.7 m) between supports, the side bars of the ladder shall be made of angle iron not lighter than 3 in. × 3 in. × ⅜ in. (76 mm × 76 mm × 9.5 mm) or their equivalent.

13.7.4 Walkway.

13.7.4.1 A walkway at least 18 in. (457 mm) wide that extends from a point that is accessible from the tower ladder to an expansion joint located under the tank and that terminates in a platform with at least a 20 in. (508 mm) clearance around the enlarged portion of the frostproofing casing shall be provided where the tower is 30 ft (9.1 m) or more in height.

13.7.4.2 Walkway flooring shall be of 2 in. (51 mm) dressed planks spaced ½ in. (12.7 mm) apart, or of ¼ in. (6.4 mm) steel plate with drain holes.

13.7.4.3 The walkway and platform shall be rigidly supported and shall be braced laterally to prevent swinging.

13.7.4.4 All supports shall be of steel, and connections shall be welded.

13.7.4.5 A 42 in. (1067 mm) high rigid railing shall be placed on each side of the walkway and around the outer edge of the platform.

13.7.4.5.1 The top rail and posts shall be of not less than 1½ in. (40 mm) pipe or shall be of angle iron not lighter than 2 in. × 2 in. × ⅜ in. (51 mm × 51 mm × 9.5 mm).

13.7.4.5.2 An intermediate rail shall be provided.

13.7.4.5.3 The ends of threads shall be burred on all bolted connections.

13.7.4.5.4 The maximum spacing of rail posts shall not be more than 8 ft (2.4 m).

13.7.4.5.5 The railing shall be designed to withstand a 200 lb (91 kg) load in any direction at any point on the top rail.

13.7.4.5.6 A toe board shall be provided if required.

13.7.5 Balcony.

13.7.5.1 Towers over 20 ft (6.1 m) high that have a horizontal circular girder at the top of the inclined columns to resist the inward thrust from the columns shall be provided with a balcony at least 24 in. (610 mm) wide around the base of the cylindrical portion of the tank.

13.7.5.2 A rigid railing at least 42 in. (1067 mm) high shall be provided around the outside of the balcony.

13.7.5.3 The top rail and posts shall be not lighter than 1½ in. (40 mm) pipe or shall be of 2 in. × 2 in. × ⅜ in. (51 mm × 51 mm × 9.5 mm) angles.

13.7.5.4 An intermediate rail shall be provided.

13.7.5.5 The maximum spacing of rail posts shall not be more than 8 ft (2.4 m).

13.7.5.6 The railing shall be designed to withstand a 200 lb (91 kg) load in any direction at any point on the top rail.

13.7.5.7 A toe board shall be provided if required.

13.7.5.8 A balcony shall not be required for pedestal-supported or tripod-supported tanks.

13.7.5.9 For inclined column tower-supported tanks without a cylindrical shell, a balcony shall not be omitted without the approval of the authority having jurisdiction.

13.7.6* Painting Inaccessible Parts. Inaccessible parts subject to corrosion shall be protected by paint before assembly.

13.7.7 Painting.

13.7.7.1 All steel shall be cleaned, primed, and coated in accordance with 5.6.2.

13.7.7.1.1 Where encased in concrete or where edges are to be welded, steel shall not be required to be cleaned, primed, and coated in accordance with 5.6.2.

13.7.7.2 Primers for other exterior paint systems shall be permitted to be used.

13.7.8 Field Painting.

13.7.8.1 After construction, all weld seams, unprimed margins, field bolts, and any areas where the paint has been damaged shall be blast-cleaned and patch-primed with the same primer.

13.7.8.2 Two overall finish coats of aluminum or alkyd enamel in a color specified by the purchaser shall be used in accordance with the requirements for "Outside Paint System No. 1" of AWWA D102.

13.7.8.3 The total system dry film thickness shall be 3.5 mil (89 μm) for aluminum finishes and 4.5 mil (114 μm) for alkyd enamels.

13.7.8.4 As provided for by "Outside Paint System No. 4" of AWWA D102, the purchaser shall be permitted to specify an extra complete coat of primer for a total minimum system dry film thickness of 6.0 mil (152 μm) for alkyd enamels for more severe atmospheric exposures.

13.7.8.5 Other finish coats shall be permitted to be used, provided they are compatible with the primer and provided permission is first obtained from the authority having jurisdiction.

13.7.8.6 Finish coats shall be of the same types selected for exterior tank surfaces.

13.7.9 Painting Application. All painting shall be applied in accordance with Section 5.8.

Chapter 14 Pipe Connections and Fittings

14.1* General Information.

14.1.1 Watertight Intersections at Roofs and Floors.

14.1.1.1 The intersections of all tank pipes with roofs and concrete or waterproof floors of buildings shall be watertight.

14.1.1.2 Where tank pipes pass through concrete roofs, a watertight intersection shall be obtained by using fittings that are caulked with oakum or by pouring the concrete solidly around the pipes, which first shall be wrapped with two or three thicknesses of building paper.

14.1.1.3 Where concrete is used, the upper side of the intersection shall be well flashed with a suitable, firm, waterproof material that is noncracking and that retains its adhesion and flexibility.

14.1.1.4 Wood roofs also shall be built tightly around the pipes and shall be made watertight by means of fittings that are caulked with oakum or by using flashing.

14.1.1.5 Where tank pipes pass through a concrete or waterproof floor, a watertight intersection, as described in 14.1.1.1, shall be obtained so that water from above cannot follow down the pipe to the lower floors or to the basement.

14.1.2 Rigid connections to steel tanks shall be made by means of a welded joint with approval by the authority having jurisdiction.

14.1.2.1 A rigid connection to a wood tank shall be made by means of a running nipple or by means of threaded flanges, one inside the tank and one outside the tank, bolted together through the wood with movable nuts outside.

14.1.3* Placing Tank in Service. All tank piping shall be installed immediately after completion of the tank and tower construction so that the tank can be filled and placed in service promptly.

14.1.4 The Contract. To ensure the installation of equipment, the contract shall specify that the finished work shall conform with this standard in all respects.

14.1.5 Precautions During Repairs.

N **14.1.5.1** The authority having jurisdiction shall be notified when the tank is out of service for repairs.

14.1.5.2 Whenever an in-service tank is taken out of service for repairs, the impairment procedures in NFPA 25 shall be followed.

•

14.1.6* Heater Thermometer.

14.1.6.1 In the case of a gravity circulating heating system, an accurate thermometer shall be located as specified in 16.1.7.5.

14.1.6.2 Where a tank contains a radiator steam heater, an accurate socket thermometer shall be located as specified in 16.3.7.

14.1.7* Connections for Use Other Than for Fire Protection.

N **14.1.7.1** Connections for other than fire protection shall be approved.

14.1.7.1.1* Pipe used for other than fire protection purposes shall be entirely separate from fire-service pipes and shall extend to an elevation inside the tank above that required for fire protection.

N **14.1.7.2** Connections shall be rigidly made to the tank bottom, and a standard expansion joint, where needed, shall be provided in each such pipe that is located below, and entirely independent of, the tank.

14.1.7.3 Pipe inside the tank shall be braced near the top and at points not over 25 ft (7.6 m) apart.

14.1.7.4* Where an expansion joint exists, it shall be of the standard type, shall be located below the tank, and shall be without connection to the tank plates.

14.1.7.5* At Roofs and Floors. Where a pipe used for other than fire protection purposes intersects with a building roof or a waterproof or concrete floor, the intersection shall be watertight.

14.1.8* Water-Level Gauge. A water-level gauge of suitable design shall be provided. It shall be carefully installed, adjusted, and properly maintained.

14.1.8.1 Where an altitude gauge is used, it shall be at least 6 in. (152 mm) in diameter and shall be of noncorrodable construction.

14.1.8.2 The gauge shall be located to prevent it from freezing.

14.1.8.2.1 If necessary, it shall be located in a heated building or enclosure.

14.1.8.2.2 A blow-off cock shall be located between the gauge and the connection to the tank.

14.1.8.3 A listed, closed-circuit, high-water and low-water level electric alarm shall be permitted to be used in place of the gauge where acceptable to the authority having jurisdiction.

14.1.8.3.1 Provisions shall be made for the attachment of a calibrated test gauge.

14.1.8.4 For underground tanks, water-level monitoring shall be capable of being read and/or supervised above ground.

14.1.9* Frostproof Casing. The frostproof casing shall be maintained in good repair and shall be weathertight throughout.

14.1.10 Tanks with Large Tank Risers.

14.1.10.1* Large steel-plate tank riser pipes of 3 ft (0.91 m) or more in diameter and without frostproof casing shall be acceptable where properly heated.

14.1.10.2 A manhole at least 12 in. × 16 in. (305 mm × 406 mm) shall be provided, and its lower edge shall be level with the discharge piping protection specified.

14.1.11 Discharge Piping Protection.

14.1.11.1* In the case of tanks with a large steel-plate tank riser [3 ft (0.91 m) diameter or larger], the inlet to the vertical discharge pipe that is located within the large tank riser shall be protected against the entry of foreign material.

14.1.11.2 The plate shall be supported by at least three supporting bars 1½ in. × ¼ in. (38.1 mm × 6.4 mm), by ⅝ in. (15.9 mm) round rods, or by the equivalent, that elevate all portions of the plate at a height at least equal to the pipe diameter located above the discharge pipe inlet.

14.1.11.3 The attachment of the supports to the discharge pipe shall be made directly by welding or bolting or by means of a ¼ in. (6.4 mm) thick tightly fitting sectional clamp or collar that has ⅝ in. (15.9 mm) bolts in the outstanding legs of the clamps or collar.

14.1.11.4 A clearance of at least 6 in. (152 mm) shall be provided between all portions of the flanges of a tee or fabricated plate and the large tank riser plate.

14.1.12 Steel Pipe.

14.1.12.1 Steel pipe shall conform to ASTM A53/A53M, Type E, Type F, Type S, Grade A, or Grade B, manufactured by the open-hearth, electric furnace, or basic oxygen process, or it shall conform to ASTM A106/A106M, Grade A or Grade B.

14.1.12.2 Paragraphs 14.1.12.2.1 through 14.1.12.2.3 shall apply to steel pipe that is in contact with storage water.

14.1.12.2.1 Steel pipe smaller than 2 in. (50 mm) shall not be used.

14.1.12.2.2 Steel pipe of 2 in. to 5 in. (50 mm to 125 mm) shall be schedule 80.

14.1.12.2.3 All steel pipe 6 in. (150 mm) and larger shall be schedule 40.

14.2 Discharge Pipe.

14.2.1 At Roofs and Floors. The intersection of discharge pipes, as well as the intersection of all other tank pipes, with roofs or with waterproof or concrete floors shall be watertight.

14.2.2 Size. The minimum discharge pipe sizing shall be based on the hydraulic demand of the system(s) but shall not be less than 6 in. (150 mm).

•

14.2.3 Pipe Material.

14.2.3.1 Underground Pipe Material. Piping shall be in accordance with NFPA 24.

14.2.3.2 Aboveground Pipe Material. Aboveground pipe material shall be in accordance with NFPA 13 and NFPA 20.

14.2.4 Braces.

14.2.4.1 Either the pipe or the large steel-plate tank riser pipe, or both, shall be braced laterally by rods of not less than ⅝ in. (15.9 mm) in diameter and shall be connected to the tower columns near each panel point.

14.2.4.2 The end connection of braces shall be by means of eyes or shackles; open hooks shall not be permitted.

14.2.5 Support.

14.2.5.1 The discharge pipe shall be supported at its base by a double-flanged base elbow that rests on a concrete or masonry foundation.

14.2.5.1.1 The base elbow of tanks with steel-plate tank risers, of suction tanks, or of gravity tanks shall have bell ends.

14.2.5.2 The joint at the connection of yard piping to the base elbow shall be strapped, or the base elbow shall be backed up by concrete.

14.2.5.2.1 If the discharge pipe is offset inside a building, it shall be supported at the offset by suitable hangers that extend from the roof or floors, in which case the base elbow might not be required.

14.2.5.2.2 Large steel tank riser pipes shall be supported on a reinforced concrete pier that is designed to support the load specified in Section 13.3.

14.2.5.2.3 Concrete grout shall be provided beneath the large tank riser to furnish uniform bearing when the tank is empty.

14.2.6 Offsets.

14.2.6.1 The discharge pipe outside of buildings shall extend vertically to the base elbow or building roof without offsets where possible.

14.2.6.2 If an offset is unavoidable, it shall be supported at the offsetting elbows and at intermediate points not over 12 ft (3.7 m) apart, and it also shall be rigidly braced laterally.

14.2.6.3 The supports shall consist of steel beams that run across the tower struts or of steel rods from the tower columns arranged so that there is no slipping or loosening.

14.2.7 Expansion Joint.

14.2.7.1 Tanks with flanged or welded pipe tank risers [12 in. (250 mm) and under] shall have a listed expansion joint on the fire-service discharge pipe where the tank is on a tower that elevates the bottom 30 ft (9.1 m) or more above the base elbow or any offset in the discharge pipe.

14.2.7.2 Expansion joints shall be built to conform to Section 14.3.

14.2.8 Rigid Connection.

14.2.8.1 When the distance between the tank bottom and the base elbow or supporting hanger is less than 30 ft (9.1 m), the discharge pipe shall be connected by an expansion joint that is built to conform to Section 14.3 or shall be rigidly connected in accordance with 14.1.2.

14.2.8.2 The top of the pipe (or the fitting attached to the top) shall extend above the inside of the tank bottom or base of a steel-plate tank riser to form a settling basin.

14.2.8.2.1 The top of a steel-plate tank riser shall be connected rigidly to the suspended bottom of the tank.

14.2.8.2.2 The discharge pipe from a steel-plate tank riser of a tank that is located over a building shall be connected rigidly to the base of the larger tank riser.

14.2.8.2.3 A rigid flanged connection or welded joint shall be permitted to be used between the discharge pipe and the bottom of a suction tank, a gravity tank, or the base of a steel-plate tank riser of a tank that is located on an independent tower where special approval is obtained from the authority having jurisdiction.

14.2.8.2.4 When the base of a steel-plate tank riser is in its final position on a concrete support, it shall be grouted to obtain complete bearing.

14.2.9 Swing Joints. Where the vertical length of a discharge pipe that is located below an offset, either inside or outside a building, is 30 ft (9.1 m) or more, a four-elbow swing joint that is formed, in part, by the offset shall be provided in the pipe.

14.2.10 Settling Basin.

14.2.10.1 The depth of the settling basin in the tank bottom shall be 4 in. (102 mm) for a flat-bottom tank and 18 in. (457 mm) for a suspended-bottom tank.

14.2.10.2 The settling basin at the base of a large steel-plate tank riser shall be at least 3 ft (0.91 m) deep.

14.2.11 Check Valve.

14.2.11.1 A listed check valve shall be placed horizontally in the discharge pipe and shall be located in a pit under the tank where the tank is located on an independent tower.

14.2.11.2 Where the tank is located over a building, the check valve shall ordinarily be placed in a pit, preferably outside the building.

14.2.11.3 Where yard room is not available, the check valve shall be located on the ground floor or in the basement of a building, provided it is protected against breakage.

N **14.2.11.4*** For suction tanks where the discharge pipe is not used as a fill connection, check valve shall not be required.

14.2.12 Controlling Valves.

14.2.12.1 A listed indicating control valve shall be placed in the discharge pipe on each side of the check valve, and the valve on the discharge side shall be located between the check valve and any connection of the tank discharge to other piping.

•

14.2.12.2 Where yard room for an indicator post is not available, a listed indicating control valve that is of similar arrangement, but that is located inside the valve pit or room, shall be used.

Shaded text = Revisions. Δ = Text deletions and figure/table revisions. • = Section deletions. *N* = New material.

14.2.12.3 Where the tank is on an independent tower, the valve shall be placed in the pit with the check valve, preferably on the yard side of the base elbow.

14.2.12.4 Where a tank is used as a suction source for a fire pump, the listed indicating control valve shall be of the OS&Y type.

14.2.12.5 Where the tank is located over a building, the valve shall be placed under the roof near the point where the discharge pipe enters the building.

14.2.12.6 For suction tanks, the valve shall be located in accordance with NFPA 20.

14.2.13* Anti-Vortex Plate Assembly.

14.2.13.1 The discharge outlet for every suction tank shall be equipped with an anti-vortex plate assembly.

14.2.13.2* The assembly shall consist of a horizontal steel plate that is at least twice the diameter of the outlet on a long radius elbow fitting, where required, mounted at the outlet a distance above the bottom of the tank equal to one-half the diameter of the discharge pipe.

14.2.13.3 The minimum distance above the bottom of the tank shall be 6 in. (152 mm).

14.3 Expansion Joint.

14.3.1 Connection to Tank.

14.3.1.1 A listed expansion joint shall be used where required by 14.2.7 and 14.2.8.1.

14.3.1.2 The expansion joint shall be placed immediately above the foot elbow or shall be connected to the tank bottom using welding for a steel tank and bolts or a special screw fitting for a wood tank.

14.3.1.3 The movable nuts on bolts shall be located on the outside of the tank.

14.3.2 General Design.

14.3.2.1 The expansion joint design shall be selected such that it resists the stresses and corrosion to which it is subjected.

14.3.2.2 One or both of the two parts that slide, one on the other, shall be of brass or other noncorrosive material to resist wear.

14.3.3 Clearances. A minimum 1/16 in. (1.6 mm) clearance shall be provided around all movable parts to prevent binding, and at least ½ in. (12.7 mm) shall be provided between the cast-iron body and an iron or steel slip-tube.

14.3.4 Body.

14.3.4.1 The body shall be of steel or cast iron and, if connected to the tank bottom, shall provide for a settling basin extension of proper length.

Δ **14.3.4.2** Provisions shall be made for a packing space.

Δ **14.3.5 Gland.** The adjustable gland shall be of brass or iron and shall be connected to the body casting, with four standard bolts of at least ⅝ in. (15.9 mm) diameter and of a length to allow full adjustment.

14.3.6 Slip-Tube.

14.3.6.1 The sliding tube at the top of the discharge pipe shall be of brass or iron.

14.3.6.2 If the gland is iron, the slip-tube shall have a triple-plated brass outer surface.

14.3.6.3 If the gland is brass, the slip-tube shall be of cast iron or steel, and the top of the packing space shall be formed with brass and a clearance of at least ½ in. (12.7 mm) provided at all points between the cast-iron body and the slip-tube.

14.3.6.4 The upper part of the slip-tube shall be machined over a length such that the top of the gland can be dropped to 6 in. (152 mm) below the bottom of the body casting so as to enable repacking.

14.3.6.5 The top of the slip-tube shall be located approximately 5 in. (127 mm) below the top of 4 in. (102 mm) settling-basin extensions and 12 in. (305 mm) below the top of 18 in. (457 mm) settling-basin extensions.

14.3.7 Packing.

14.3.7.1 The packing shall consist of approved wicking material that is saturated with rapeseed oil and graphite or other approved material.

14.3.7.2 Packing at least 2 in. (51 mm) deep and ½ in. (12.7 mm) thick shall be provided in the packing space.

14.4 Filling.

14.4.1 A permanent pipe connected to a water supply shall be provided to fill the tank, except as provided in 14.4.1.1.

14.4.1.1 Where a permanent water supply is not available to refill the tank, an approved plan shall be permitted for manually refilling the tank.

14.4.1.2 During the time that the tank does not have sufficient capacity to meet the demand of the fire protection system(s), the impairment procedures of NFPA 25 shall be followed.

14.4.2 The means to fill the tank shall be sized in accordance with 4.2.1.4.

14.4.3 The tank shall be kept filled, and the water level shall never be more than 4 in. (102 mm) below the designated fire service level.

14.4.4 The filling bypass shall be kept closed when not in use.

14.4.5 Bypass Around Check Valve.

14.4.5.1 Where the tank is to be filled from the fire protection system under city or fire-pump pressure, the filling pipe shall be a bypass around the check.

14.4.5.2 The bypass shall be connected into tapped bosses on the check valve or into the discharge pipe between the check valve and all other valves.

14.4.5.3 The bypass shall be sized to fill the tank in accordance with 4.2.1.4 but shall not be smaller than 2 in. (50 mm).

14.4.5.4 A listed indicating control valve shall be placed in the bypass and shall be kept closed except when the tank is being filled.

14.4.6 Filling Pumps.

14.4.6.1 When the tank is to be filled by a filling pump, the pump and connections shall be of such size that the tank can be filled in accordance with 4.2.1.4.

14.4.6.2 The filling pipe shall be of at least 2 in. (50 mm) and, except as noted in 14.4.7, shall be connected directly into the tank discharge pipe, in which case a listed indicating control valve and a check valve shall be placed in the filling pipe near the tank discharge pipe, with the check valve located on the pump side of the listed indicating valve.

14.4.6.3 The filling pump suction pipe shall not be connected to a fire service main that is supplied from the tank. The filling valve shall be open only when the tank is being filled.

14.4.7 Where a separate fill pipe is used, automatic filling shall be permitted.

14.4.8 Filling from Drinking Water Supply. Where the water in the fire protection system is not suitable for drinking purposes and the tank is filled from a potable water supply, the filling pipe shall be installed in accordance with the regulations of the local health authority.

14.4.9 Filling Pipe at Roofs and Floors. The intersection of a separate filling pipe with a roof or a waterproof or concrete floor shall be watertight.

14.4.10 Suction Tanks.

14.4.10.1 Pipes for the automatic filling of suction tanks shall discharge into the opposite half of the tanks from the pump suction pipe.

14.4.10.2 Where an over-the-top fill line is used, the outlet shall be directed downward.

14.5* Break Tanks. Where a break tank is used to provide the pump suction water supply, the installation shall comply with this section.

14.5.1 Break Tank Size. The tank shall be sized for a minimum duration of 15 minutes with the fire pump operating at 150 percent of rated capacity.

14.5.2 Refill Mechanism. The refill mechanism shall be listed and arranged for automatic operation.

14.5.2.1 If the break tank capacity is less than the maximum system demand for 30 minutes, the refill mechanism shall meet the requirements in 14.5.2.1.1 through 14.5.2.1.5.

14.5.2.1.1 Dual automatic refill lines, each capable of refilling the tank at a minimum rate of 150 percent of the fire pump(s) capacity, shall be installed.

14.5.2.1.2 If available supplies do not permit refilling the tank at a minimum rate of 150 percent of the rated pump capacity, each refill line shall be capable of refilling the tank at a rate that meets or exceeds 110 percent of the maximum fire protection system design flow.

14.5.2.1.3 A manual tank fill bypass designed for and capable of refilling the tank at a minimum rate of 150 percent of the fire pump(s) capacity shall be provided.

14.5.2.1.4 If available supplies do not permit refilling the tank at a minimum rate of 150 percent of the rated pump capacity, the manual fill bypass shall be capable of refilling the tank at a rate that meets or exceeds 110 percent of the maximum fire protection system design flow.

14.5.2.1.5 A local visible and audible low liquid level signal shall be provided in the vicinity of the tank fill mechanism.

14.5.2.2 If the break tank is sized to provide a minimum duration of 30 minutes of the maximum system demand, the refill mechanism shall meet the requirements in 14.5.2.2.1 through 14.5.2.2.5.

14.5.2.2.1 The refill mechanism shall be designed for and capable of refilling the tank at 110 percent of the rate required to provide the total fire protection system demand [110% (Total Demand – Tank Capacity) / Duration].

14.5.2.2.2 A manual tank fill bypass shall be designed for and capable of refilling the tank at 110 percent of the rate required to provide the total fire protection system demand [110% (Total Demand – Tank Capacity) / Duration].

14.5.2.2.3 The pipe between the city connection and the automatic fill valve shall be installed in accordance with NFPA 24.

14.5.2.2.4 The automatic filling mechanism shall be maintained at a minimum temperature of 40°F (4.4°C).

14.5.2.2.5 The automatic filling mechanism shall activate a maximum of 4 in. (102 mm) below the overflow level.

•

14.6 Overflow.

14.6.1 Size. The overflow pipe shall have a capacity greater than the fill connection but shall not be less than 3 in. (75 mm) throughout.

14.6.2 Inlet.

14.6.2.1 The inlet of the overflow pipe shall be located at the top capacity line or high waterline.

14.6.2.2 The inlet also shall be located at least 1 in. (25 mm) below the bottom of the flat cover joists in a wood tank, but shall never be closer than 2 in. (50 mm) to the top of the tank.

14.6.2.3 Unless the maximum fill capacity is known and the overflow capacity is calculated to be at least equal to the fill capacity, the overflow pipe shall be at least one pipe size larger than the fill line and shall be equipped with an inlet such as a concentric reducer, or equivalent, that is at least 2 in. (50 mm) larger in diameter.

14.6.2.4 The inlet shall be arranged so that the flow of water is not retarded by any obstruction.

14.6.2.5 An overflow pipe that is cut with the opening to fit the roof shall be used on a steel tank, provided a suitable horizontal suction plate and vortex breaker are used to ensure full capacity flow for the overflow.

14.6.3* Stub Pipe.

14.6.3.1 Where dripping water or a small accumulation of ice is not objectionable, the overflow shall be permitted, at the discretion of the owner, to pass through the side of the tank near the top.

14.6.3.2 The pipe shall be extended with a slight downward pitch to discharge beyond the tank or balcony and away from the ladders and shall be adequately supported.

14.6.3.3 Overflows for pedestal tanks shall be extended to ground level within the access tube and pedestal.

14.6.4 Inside Pipe.

14.6.4.1 Where a stub pipe is undesirable, the overflow pipe shall extend down through the tank bottom and inside the frostproof casing or steel-plate tank riser and shall discharge through the casing near the ground or roof level.

14.6.4.2* The section of the pipe inside the tank shall be of brass, flanged cast iron, or steel.

14.6.4.2.1 Inside overflow pipes shall be braced to the tank and tank riser plates near the top and at points not over 25 ft (7.6 m) apart.

14.6.4.2.2 The discharge shall be visible, and the pipe shall be pitched to drain.

14.6.4.2.3 Where the discharge is exposed, the exposed length shall not exceed 4 ft (1.2 m) and shall avoid the entrance to the valve pit or house.

14.7 Clean-Out and Drain.

14.7.1 Handhole. A standard handhole, with a minimum dimension of 3 in. (76 mm), or a manhole shall be provided in the saucer plate outside of the frostproof casing and at the bottom of an elevated steel tank with a suspended bottom unless the tank has a large tank riser pipe 3 ft (0.91 m) or more in diameter.

14.7.2 Manholes.

14.7.2.1 A minimum of two manholes shall be provided in the first ring of the steel suction tank shell at locations to be designated by the purchaser.

14.7.2.1.1 The design of the manholes for steel tanks shall be in accordance with AWWA D100 for welded steel tanks, and AWWA D103 for bolted steel tanks.

14.7.3 For Elevated Flat-Bottom Tanks.

14.7.3.1 Where elevated, at least a 2 in. (50 mm) pipe clean-out also shall be provided outside of the frostproof casing in the bottom of a wood tank or a flat-bottom steel tank.

14.7.3.2 The clean-out connection for wood tanks shall consist of a special screw fitting with a gasket or a pair of 2 in. (50 mm) pipe flanges.

14.7.3.3 The connection for steel tanks shall consist of an extra-heavy coupling welded to the bottom plate.

14.7.3.4 The coupling shall be welded to both sides of the tank plates.

14.7.3.5 A piece of 2 in. (50 mm) brass pipe about 5 in. (127 mm) long that is capped at the top with a brass cap shall be screwed into the inner fitting or flange.

14.7.3.6* The clean-out shall be watertight.

14.7.4 Tank Riser Drain.

Δ **14.7.4.1** A drain pipe of at least 2 in. (50 mm) that is fitted with a controlling valve and a ½ in. (13 mm) drip valve shall be connected into the tank discharge pipe near its base and on the tank side of all valves.

14.7.4.2 Where the outlet is an open end outlet, it shall be fitted with a 2½ in. (65 mm) hose connection unless it discharges into a funnel or cistern piped to a sewer.

14.7.4.3 Where the drain is piped directly to a sewer, a sight glass or a ¾ in. (19.1 mm) test valve on the underside of the pipe shall be provided.

14.7.4.4 Where the drain pipe is to be used for a hose stream, the controlling valve shall be a listed gate valve or angle valve.

Δ **14.7.4.5*** Where a circulation-tank heater is located near the base of the tank riser, the drain pipe shall be connected from the cold-water return pipe between the cold-water valve and the heater in order to permit flushing water from the tank through the hot-water pipe heater and drain for clean-out purposes.

14.8 Connections for Other Than Fire Protection.

14.8.1 Dual-Service Tanks. Where dual service is necessary, an adequate supply of water shall be constantly and automatically reserved in the tank for fire protection purposes.

14.8.2 Pipe for Other Than Fire Protection Purposes.

14.8.2.1 Pipe inside the tank that is used for other than fire protection purposes shall be brass.

14.8.2.2 Steel pipe shall be permitted to be used where the pipe is larger than 3 in. (75 mm), or cast iron shall be permitted where the pipe is 6 in. (150 mm) or larger.

14.9 Sensors.

14.9.1 Provisions shall be made for the installation of sensors in accordance with *NFPA 72* for two critical water temperatures, two critical water levels, and two critical pressure readings (for pressure tanks only).

• *N* **14.9.2** Where supervision is required, supervision shall be provided as follows:

(1) Water temperature below 40°F (4.4°C)
(2) Return of water temperature to 40°F (4.4°C)
(3) Water level 3 in. (76.2 mm) (pressure tanks) or 12 in. (300 mm) (all other tanks)
(4) Return of water level to normal
(5) Pressure in pressure tank 10 psi (0.48 kPa) below normal
(6) Pressure in pressure tank 10 psi (0.48 kPa) above normal

Chapter 15 Valve Enclosures and Frost Protection

15.1 Valve Pit or House and Heater House.

15.1.1 General.

15.1.1.1 Where the tank is on an independent tower, a valve pit or house shall be built at the base of the discharge pipe to house the valves, tank heater, and other fittings.

15.1.1.2 Where a large valve pit is provided below grade, it shall contain all equipment, including the check valve in the horizontal run.

15.1.1.3 Where a house is located above grade with no large pit beneath, it shall comply with 15.1.1.3.1 and 15.1.1.3.2.

15.1.1.3.1 The gate valve shall be provided in the vertical part of the tank discharge.

15.1.1.3.2 A small brick or concrete pit or well shall be constructed to contain the check valve in the horizontal pipe below the frost line.

15.1.2* Materials.

15.1.2.1 Where the valve pit is located below grade, it shall be built of portland cement concrete with a clean aggregate.

15.1.2.2 Reinforced concrete shall be a 1:2:4 mixture.

15.1.2.3 Where low stresses allow its use, plain concrete shall be a 1:3:5 mixture.

15.1.2.4 A valve house that is located above grade shall be constructed of concrete, brick, cement plaster on metal lath, or other noncombustible material with suitable heat-insulating properties. *(See Table 15.1.2.4.)*

15.1.2.5 Materials shall conform to ASTM C578, Grade 2, Type II.

15.1.2.5.1 Polystyrene shall not be used where the threat of direct exposure to flame exists.

15.1.2.6 Since nonburning polyurethane does not exist, care shall be taken to specify this material for frostproofing where the threat of direct exposure to flame exists.

15.1.3* Dimensions.

15.1.3.1 A valve pit or house shall be of sufficient size to provide a minimum clearance of 12 in. (305 mm) around all contained equipment.

15.1.3.2* A valve pit shall extend at least 6 in. (152 mm) above grade and far enough below grade to allow placement of the base elbow below the frost line and shall be at such an elevation that connection to the system can be conveniently made.

15.1.4 Design of Valve Pit.

15.1.4.1 All parts of the valve pit and the soil beneath it shall resist all loads, including the frost casing or large steel tank riser and contained water.

15.1.4.1.1 The valve pit shall require a reinforced 1:2:4 concrete mixture for the roof.

15.1.4.1.2 The walls and floor of the valve pit also shall be a reinforced 1:2:4 mixture where subjected to bending stresses from groundwater pressure or other loads.

15.1.4.1.3 The walls and floor of the valve pit shall be a plain 1:3:5 concrete mixture, not less than 8 in. (203 mm) thick.

15.1.4.2 Loads.

15.1.4.2.1 The load to be considered when designing the pier and its bearing that support a large steel-plate tank riser, where the hemispherical or ellipsoidal shape is continuous to the shell of the large tank riser without a flat horizontal diaphragm plate, shall be the weight of the water column from the pier to the tank bottom plus the weight of a cylinder of water 4 ft (1.2 m) greater in diameter than that of the large tank riser.

15.1.4.2.2 The load shall extend from the bottom to the top of the tank.

15.1.4.2.3 Where a hemispherical or ellipsoidal bottom is rigidly attached to the top of a larger tank riser by a flat horizontal diaphragm plate, the weight that is considered to act on the pier shall be the weight of the water column from the pier to the tank bottom plus the weight of a cylinder of water whose radius equals the radius of the tank riser at the tank bottom plus one-half the distance from the edge of the tank riser to where the flat horizontal diaphragm plate connects to the hemispherical or ellipsoidal bottom plate, and the cylinder of water shall extend from the bottom to the top of the tank.

15.1.4.2.4 The pier shall adjoin a pit that contains the usual valves and accessories.

15.1.4.2.5 A slip joint shall be provided between the pier and the valve pit where the soil is incapable of sustaining a load of 2 tons/ft^2 (19,548 kg/m^2) without negligible settlement.

15.1.5 Pit Manhole.

15.1.5.1 A standard round manhole with a cover at least 24 in. (610 mm) in diameter, a square metal manhole with a substantially hinged cover at least 20 in. (508 mm) on a side, or a raised hatch of equivalent size with a cover built of two-ply matched boards with tar paper between the boards shall be provided in the roof of the valve pit.

15.1.5.2 Where there is no heater in the pit, the manhole shall have a properly fitted inside cover of 2 in. (51 mm) plank, or its equivalent, that is located at least 4 in. (102 mm) below the outer cover.

15.1.6 Pit Ladder. A rigidly secured steel ladder shall extend from the manhole to the floor.

15.1.7 Waterproofing Pit.

15.1.7.1 Where the pit is located below drainage level, the outside surface shall be thoroughly waterproofed.

Δ Table 15.1.2.4 Frostproofing Materials and Required Minimum Thickness

Type of Insulation	Low One-Day Mean Temperature [°F (°C)]																	
	+30° (−1.11°)	+25° (−3.89°)	+20° (−6.67°)	+15° (−9.44°)	+10° (−12.22°)	+5° (−15°)	0° (−17.78°)	−5° (−20.56°)	−10° (−23.33°)	−15° (−26.11°)	−20° (−28.89°)	−25° (−31.67°)	−30° (−34.44°)	−35° (−37.22°)	−40° (−40°)	−45° (−42.78°)	−50° (−45.56°)	−55° (−48.33°)
Insulated metal frostproof casing	None	3 in. (76.2 mm) thick fiberglass in metal shield																
Foam glass	None	2 in. (50.8 mm) thick					3 in. (76.2 mm) thick							4 in. (101.6 mm) thick				
Fiberglass [min. (3 lb/ft^3) 48.1 kg/m^3]	None	1 in. (25.4 mm) thick			1½ in. (38.1 mm) thick					2 in. (50.8 mm) thick				2½ in. (63.5 mm) thick				
Polystyrene 15.1.2.5	None	1 in. (25.4 mm) thick			1½ in. (38.1 mm) thick					2 in. (50.8 mm) thick				2½ in. (63.5 mm) thick				
Polyurethane 15.1.2.6	None	1 in. (25.4 mm) thick								2 in. (50.8 mm) thick								

Shaded text = Revisions. Δ = Text deletions and figure/table revisions. • = Section deletions. *N* = New material.

15.1.7.2 Waterproofing shall be achieved either by painting the surface with asphalt and then covering it with at least two layers of felt and asphalt alternately, with the felt lapped 18 in. (457 mm), or by other methods acceptable to the authority having jurisdiction.

15.1.8* Pit Drain. A sump and drain shall be provided wherever a sewer is available or where soil conditions make the arrangement possible.

15.1.9 Heater House.

15.1.9.1 A heater house that is located above grade shall be substantial, and the roof shall be strong enough to support the frostproof casing, where provided, and other loads without excessive deflection.

15.1.9.1.1 A tight-fitting double door of a size for the admittance of persons or equipment shall be provided.

15.1.9.2 Where the house contains a heater that burns oil or a gas that is heavier than air, and is located over a valve pit that is located below grade, the entrance to the pit shall be outside the heater house.

15.1.9.2.1 The portion of the floor of the heater house that is over the pit shall be of continuous concrete and shall be tightly caulked around all pipes.

15.1.9.3 Where the house contains a fuel-burning heater, louvers that are located above the maximum snow level or a vent shall be provided to furnish fresh air for the combustion of fuel, in addition to providing a vent to exhaust the products of combustion from the house.

15.1.10 Heating Valve House or Pit and Heater House. A valve or heater house that is located above grade, as well as the valve pit, shall be heated to maintain a temperature of at least 40°F (4.4°C) during the most severe weather.

15.2 Frostproof Casing.

15.2.1 General. A listed frostproof casing shall be placed around all exposed tank piping in localities where the lowest mean atmospheric temperature for one day, as shown by Figure 16.1.4, is 20°F (–6.7°C) or lower.

15.2.1.1 Tank piping that is subjected to temperatures below freezing within unheated buildings, or dry tank risers of elevated tanks, also shall be protected.

15.2.1.2 Combustible frostproof casings that are subjected to serious fire exposure shall be protected by at least 1 in. (25.4 mm) of cement plaster on metal lath.

15.2.1.3 The casing or discharge pipe shall be braced as specified in 14.2.4, and bracing shall be provided between the frostproof casing and the discharge pipe.

15.2.1.4 Noncombustible construction or its equivalent, as shown in Figure B.1(r), shall be used throughout.

15.2.2 Wood.

15.2.2.1 Where special permission is obtained from the authority having jurisdiction, frostproof casings shall be permitted to be of wood. *(See A.16.1.2.)*

15.2.2.1.1 All lumber used for frostproof casings shall be sound and free from large or loose knots.

15.2.2.1.2 Sheathing shall be matched stock, dressed from a nominal thickness of at least 1 in. (25.4 mm) to a finished thickness of not less than ⅝ in. (15.9 mm).

15.2.2.1.3 One thickness of heavy nonabsorbent or saturated building paper shall be wrapped around all except the outer courses of sheathing.

15.2.2.1.4 Air spaces shall be neither less than 1 in. (25.4 mm) nor more than 2 in. (51 mm).

15.2.2.1.5 Horizontal nailing strips that are spaced not more than 4 ft (1.2 m) apart shall be provided.

15.2.2.2 Effective firestops shall be provided in all air spaces at approximately 6 ft (1.8 m) and 10 ft (3.0 m) above the base of the casing.

15.2.2.2.1 For prefabricated casings, the lower firestop shall be located at the base of the casing.

15.2.2.2.2 Where the casing contains only water pipes, noncombustible insulating material at least 4 in. (102 mm) thick and supported on 2 in. (51 mm) planks, or the equivalent, shall be used for the firestops.

15.2.2.2.3 The insulating material shall be packed tightly in any spaces between the planks and pipes.

15.2.2.2.4 Where the casing contains a steam pipe, a listed noncombustible material shall be used instead of the 2 in. (51 mm) planks.

15.2.2.2.5 After cleaning the pipes with wire brushes and scrapers, the pipes shall be protected against corrosion at the firestops by the liberal application of red lead paint with litharge added. *(See Section 5.6.)*

15.2.2.2.6 At least 1½ in. × 1/16 in. (38.1 mm × 1.6 mm) galvanized iron flats or ⅜ in. (9.5 mm) round hoops shall be placed around circular casings over each nailing strip.

15.2.2.2.7 The bracing between the frostproof casing and the discharge pipe shall be spaced at intervals of not over 4 ft (1.2 m).

15.2.2.2.7.1 Prefabricated casing shall be braced to the discharge pipe at the ends of the sections at intervals of not over 16 ft (4.9 m).

15.2.3 Top.

15.2.3.1 Where the casing is of wood or metal, an enlarged section shall be provided directly under the tank bottom and shall fit over the main portion of the casing with a slip joint lapping of at least 6 in. (152 mm) to provide for the expansion or settlement of the tower.

15.2.3.2 The enlarged section shall have the same insulating qualities as the main casing and shall be tightly and securely fitted to the tank bottom.

15.2.3.3 A tank with a hemispherical or other suspended bottom shall be built in the shop.

15.2.4 Bottom.

15.2.4.1 The casing shall be supported at the bottom by the roof of the valve pit or building, using beams if necessary.

15.2.4.2 The joint around the bottom shall be watertight to prevent leakage from outside.

15.2.4.3 Where the tank is located over a building, the joint between the roof and pipes inside the casing also shall be watertight to keep water from draining into the building if a pipe is broken. *(See 14.1.1.)*

15.2.4.4 The lower end of the casing shall be protected from the absorption of moisture.

15.2.5 Paint.

15.2.5.1 Unless the lumber that is used in a wood casing has been suitably treated with a preservative, all exposed parts shall be given at least two coats of a good grade of paint.

15.2.5.2 Where a metal casing is used, all surfaces shall be given two coats of paint as specified in Section 5.6 and Section 5.7.

Chapter 16 Tank Heating

16.1 General.

16.1.1 Tanks that are subject to freezing shall be heated.

16.1.2* The heating system shall be of such capacity that the temperature of the coldest water in the tank or tank riser, or both, is maintained at or above 42°F (5.6°C) during the coldest weather.

16.1.2.1 The coldest weather temperature that is used to determine the need for heating shall be based on the lowest mean temperature for one day, as shown in Figure 16.1.4.

16.1.2.2* A low water temperature alarm, set at 40°F (4.4°C), shall be provided.

Δ **16.1.3** The method of heating shall conform to this chapter and shall be based on the type of tank and its geographical location.

Δ **16.1.4*** The method of heating shall be based on calculating the heat loss of water in water tanks due to ambient temperature using Figure 16.1.4.

16.1.4.1 The heater shall be plainly marked with a plate or cast lettering that indicates the kilowatt (British thermal unit) per hour input, type of heater, and the manufacturer's name.

16.1.4.2 The allowable working pressure of the heater shall not be less than the maximum filling pressure sustained when the tank is being filled.

16.1.5* Location.

16.1.5.1 The heater shall be located in a valve pit, a special heater house, or a building at or near the base of the tank structure.

16.1.5.2 Where the tank is located over a building, the heater shall be located in the top story.

16.1.5.3 Where placed inside combustible frostproof casings, heaters shall not be in contact with any combustible material.

16.1.6 Heat Insulation.

16.1.6.1 All heaters shall be insulated to prevent excessive heat losses.

16.1.6.2 Where the tank heater is the only source of heat in a valve pit or other heater room, a length of heater or steam pipe shall be left uninsulated to maintain the temperature of the air above freezing.

16.1.7* Heater Water-Circulating Pipes.

16.1.7.1 The size of heater water-circulating pipes for wood and steel tanks shall be not less than 2 in. (50 mm) and shall be not less than shown in Table 16.1.7.1.

16.1.7.2 The installation of the hot- and cold-water-circulating pipes shall be in accordance with 16.1.7.4 and 16.1.7.5.

16.1.7.3 Where the circulating pipes pass through the roof or waterproofed or concrete floors, the intersections shall be made watertight. *(See 14.1.1.)*

16.1.7.4 Hot-Water Pipe.

16.1.7.4.1 Copper tubing, steel conforming to Section 5.2, or brass (85 percent copper) pipe shall be used throughout.

16.1.7.4.2 Where the tank is elevated, the hot-water pipe shall be placed near the discharge pipe inside the frostproof casing.

16.1.7.4.3 The pipe shall pitch upward at all points and shall have a four-elbow swing joint or a supported brass expansion joint that is located either just above the heater or just below the tank bottom.

16.1.7.4.4 The hot water shall discharge inside the tank through a tee fitting of the nominal pipe size that is located at about one-third of the height of the tank.

16.1.7.4.5 The pipe shall be braced inside the tank and also at points not over 25 ft (7.6 m) apart for its entire length, providing enough play to allow for expansion.

16.1.7.4.6 A listed indicating valve of the nominal pipe size shall be placed in the pipe near the heater.

16.1.7.5 Cold-Water Pipe.

16.1.7.5.1 The cold-water return pipe shall be connected to the discharge pipe or tank side at a point that ensures circulation throughout the entire portion of the discharge pipe that is subject to freezing.

16.1.7.5.2 An accurate thermometer that is graduated at least as low as 30°F (–1.1°C) shall be placed in the cold-water pipe at a point where it will register the temperature of the coldest water in the system.

16.1.7.5.3 A listed indicating valve of the same size as the pipe shall be placed in the cold-water pipe at the point of connection to the discharge pipe or tank side.

16.1.7.5.4 A 2 in. (50 mm) drainpipe that discharges at a visible point shall be connected into the cold-water return pipe between the heater and the cold-water controlling valve to enable the flushing of water from the tank through the hot-water pipe, heater, and drain for clean-out purposes.

16.1.7.5.5 The drainpipe shall be arranged as specified in Figure 16.1.7.5.5(a) and Figure 16.1.7.5.5(b).

16.1.8 Relief Valve.

16.1.8.1 A listed relief valve shall be provided in the water chamber or pipe between the hot-water and cold-water valves of any water heater.

16.1.8.2 The relief valve shall be adjusted to open at a pressure of 120 lb/in.^{2} (8.3 bar).

Step 1.
Solve for the square area of the tank.

Square or rectangular tank:

$l \times h \times 2$
$w \times h \times 2$
$l \times w \times 2$

Add all the results for square area total:
where:
l = length
h = height
w = width

Cylindrical tanks:

Option 1: Flat bottom and top
Total square = A + B
Bottom and top surface area (A): $2 \times \pi \times r^2$
Cylindrical side (B): $2 \times \pi \times r \times h$

Option 2: Flat bottom and cone roof
Total square = A + B + C
Bottom surface area (A): $\pi \times r^2$
Cone surface area (B): $\pi rs + \pi r^2$
Cylindrical side (C): $2 \times \pi \times r \times h$
where:
$\pi = 3.14$
r = radius
h = height
s = slant

Step 2.
Calculate the difference between the desired tank water temperature and outside ambient.

Step 3.
Determine the R-value of tank material.

Step 4.
Solve for the Btu/hr loss:
Square area × heat difference/R-value of the tank material

Step 5.
Add 5% to the total of Step 4. When tanks are exposed to winds above 20 mph, add an additional 5% for every 5 mph above 20 mph to a maximum of 15%.

Step 6.
Convert Btu/hr to the appropriate units for the type of heating being used and include a safety factor of 10%:
Btu/hr loss × heater unit conversion × 1.1

N **FIGURE 16.1.4 Heat Loss of Water in Water Tank Due to Ambient Temperature.**

Δ Table 16.1.7.1 Minimum Size (in.) of Circulating Pipes Required for Elevated Steel Tanks

Minimum One-Day Mean Temp. (°F)	Tank Capacity (U.S. gallons)									
	15,000	20,000	25,000	30,000	40,000	50,000	60,000	75,000	100,000	150,000
+10	2	2	2	2	2	2	2	2	2	2½
+5	2	2	2	2	2	2	2	2	2	2½
0	2	2	2	2	2	2	2	2	2 ½	2 ½
–5	2	2	2	2	2	2	2	2	2 ½	2 ½
–10	2	2	2	2	2	2	2	2 ½	2 ½	2 ½
–15	2	2	2	2	2	2	2 ½	2 ½	2 ½	3
–20	2	2	2	2	2	2 ½	2 ½	2 ½	2 ½	3
–25	2	2	2	2	2 ½	2 ½	2 ½	2 ½	3	3
–30	2	2	2	2	2 ½	2 ½	2 ½	2 ½	3	3
–35	2	2	2	2 ½	2 ½	2 ½	2 ½	3	3	3
–40	2	2	2	2 ½	2 ½	2 ½	2 ½	3	3	3

Note: For SI units, °C = ⅝ (°F – 32); 1000 gal = 3.785 m³.

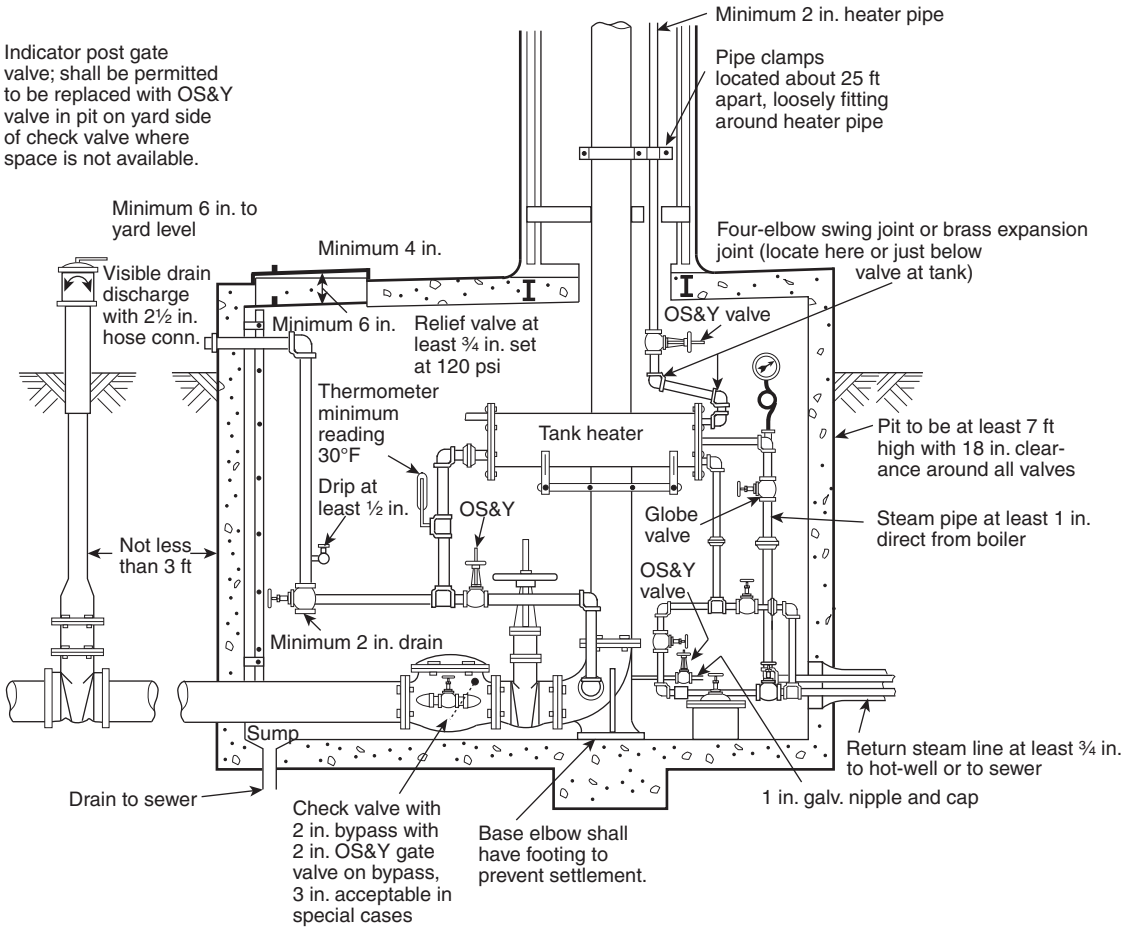

For SI units, 1 in. = 25.4 mm; 1 ft = 0.3048 m; 1 psi = 0.0689 bar; °C = 5/9 (°F–32).

FIGURE 16.1.7.5.5(a) Tank Heater Drain Arrangement at Base of Tank Riser.

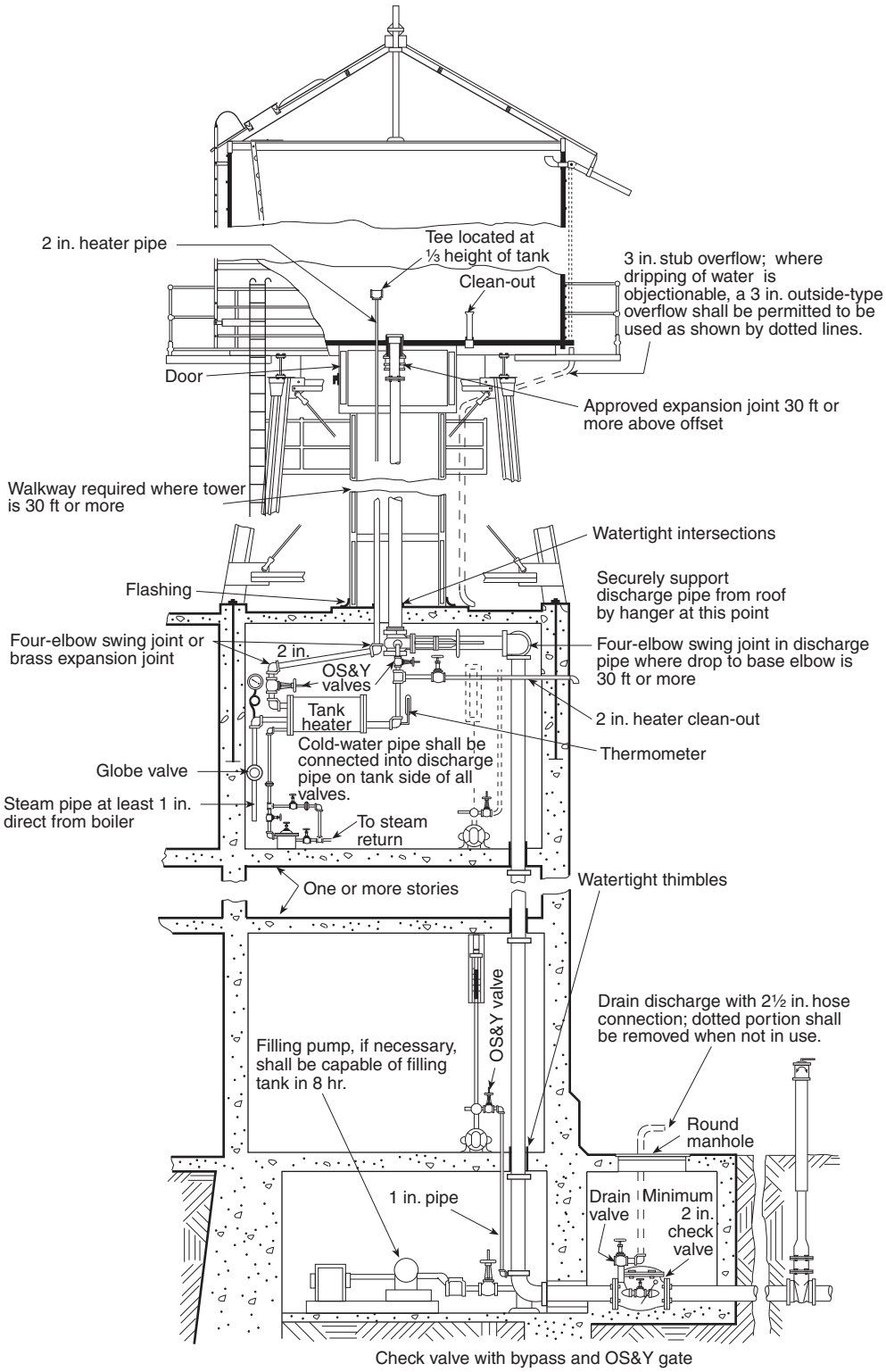

For SI units, 1 in. = 25.4 mm; 1 ft = 0.3048 m.

FIGURE 16.1.7.5.5(b) Tank Heater Drain Arrangement.

16.1.8.2.1 The opening pressure shall be neither greater than the allowable working pressure of the heater nor less than the maximum static or filling pressure to which it is subjected.

16.1.8.3 Where the heater is located close to stock that can be damaged by water, the relief shall be piped to a safe point.

16.1.9 Operation.

16.1.9.1* The thermometer shall be observed daily, and the supply of heat shall be regulated to maintain the temperature at 42°F (5.6°C).

16.1.9.1.1 Lower temperatures are dangerously near the freezing point and shall not be permitted.

16.1.9.1.2 High temperatures shall not be permitted, since they are detrimental to the equipment, particularly wood tanks and the paint in steel tanks.

16.1.9.2 Steam pressure shall be regulated by throttling the steam valve or by using a listed automatic regulatory device.

16.1.9.2.1 A small flow of steam shall constantly pass by the automatic regulating device so that circulation does not cease entirely when the regulator bulb is located in a circulating pipe that is not exposed to atmospheric temperature.

16.1.9.3 When circulating systems are temporarily shut off, the circulation shall be turned on and run for at least 2 hours to ensure that the water in the pipe is not approaching room temperature while the water in the tank is in danger of freezing.

16.1.9.3.1 Valves in circulating pipes shall be wide open when the heater is in operation.

16.1.9.3.2 An explosion or rupture hazard to the heater shall be avoided by shutting off or removing the source of heat when both the hot-water and cold-water valves are shut for any reason.

16.1.9.3.3 A relief valve shall not compensate for this precaution.

16.1.9.4 When first admitting steam, all air shall be blown from steam heaters, radiators, and traps by means of the air valve or vent on the radiator or trap.

16.2* Heating Requirements.

Δ **16.2.1*** Tanks shall be provided with heating systems in accordance with Table 16.2.1(a), Table 16.2.1(b), and Table 16.2.1(c).

•

N **Table 16.2.1(a) Heating Systems for Tanks Located Where the Lowest Mean Temperature is <5°F (–15°C) per 16.1.4***

	Gravity Circulating Method	Steam-Heated Vertical Radiator	Immersed Steam Coils	Water Recirculating with Heat Exchanger	Electric Immersion Heaters†
Elevated tanks (gravity)	X				X
Tanks on grade	X				X
Tanks below grade	X				X
Elevated tanks [unprotected riser with ≥3 ft (0.91 m) diameter, and height <100 ft (30.5 m)]		X			X
On-grade suction tank		X	X†		X
Embankment-supported coated fabric suction tank				X	

*See Figure B.1(y) and Figure B.1(z) for examples of immersion heater arrangements.
†Immersed heaters should be fully and continuously immersed, and the tank must be kept full and equipped with a low water cut-off switch.

N **Table 16.2.1(b) Heating Systems for Tanks Located Where the Lowest Mean Temperature is ≥5°F (–15°C) per 16.1.4***

	Gravity Circulating Method	Steam-Heated Vertical Radiator	Immersed Steam Coils	Electric Immersion Heaters†
Elevated tanks with unprotected risers <3 ft (0.91 m) in diameter	X		X	X
Elevated tanks with risers >3 ft (0.91 m) in diameter	No requirements for heating	No requirements for heating	No requirements for heating	No requirements for heating
Suction tanks	No requirements for heating	No requirements for heating	No requirements for heating	No requirements for heating

*See Figure B.1(y) and Figure B.1(z) for examples of immersion heater arrangements.
†Immersed heaters should be fully and continuously immersed, and the tank must be kept full and equipped with a low water cut-off switch.

N **Table 16.2.1(c) Heating Systems for Tanks Located Where the Lowest Mean Temperature is ≥15°F (–9.4°C) per 16.1.4[a]**

	Steam Loop	Steam Radiator	Electric Strip Heater	Electric Immersion Heaters[b]
Tanks with frostproof tank risers <3 ft (0.91 m) in diameter	X	X	X[c]	X

[a]See Figure B.1(y) and Figure B.1(z) for examples of immersion heater arrangements.
[b]Located inside the frostproof casing.
[c]Immersed heaters should be fully and continuously immersed, and the tank must be kept full and equipped with a low water cut-off switch.

16.3 Heating Systems.

16.3.1* Steam Water Heaters.

16.3.1.1 A steam water heater shall consist of a cast-iron or steel shell where water circulates around steam tubes or coils of brass or copper.

16.3.1.2 Galvanized steel or iron steam tubes shall be permitted but are not advised because of their more rapid depreciation and poorer heat-transfer qualities.

16.3.1.3 The shell and tubes shall be designed to withstand a test pressure of at least 2½ times the rated working pressure and not less than 300 lb/in.^{2} (20.7 bar), and they shall be so tested before shipment.

16.3.1.4 Heaters shall have a bolted flange on at least one end to facilitate disassembly for inside cleaning.

Δ **16.3.1.5** Such heaters shall be insulated, unless the heat loss is used for heating the valve pit or other housing.

16.3.1.6 Steam Supply.

16.3.1.6.1 Steam water heaters shall be connected to a reliable steam supply with a pressure not less than 10 lb/in.^{2} (0.7 bar) and not over 50 lb/in.^{2} (3.4 bar).

16.3.1.6.2 The steam pipes shall have an area at least equivalent to that of 1 in. (25 mm) nominal pipe for each heater supplied and shall run direct from the boiler heater.

16.3.1.6.3 A globe valve shall be placed in the line near the heater, and a steam gauge shall be provided between the valve and the heater.

16.3.1.6.4 Where the heater is connected to a vacuum system, the layout shall have the approval of the maker of the heating specialties and, in all cases, a final approval shall be obtained from the authority having jurisdiction.

16.3.1.7 Steam Return.

16.3.1.7.1 The steam return shall be arranged to relieve the heater of condensate.

16.3.1.7.2 The area of the return pipe shall be at least equivalent to the area of ¾ in. (20 mm) nominal pipe for each heater served.

16.3.1.7.3 A reliable steam trap at least ¾ in. (20 mm) in size, and that is equipped with an air vent and a water gauge, shall be provided near the heater where the return is not accomplished by means of gravity, or where the return is not to a vacuum system.

16.3.1.7.4 Excessive lifts from the trap shall be avoided.

16.3.1.7.5 A ¾ in. (20 mm) nominal pipe or larger bypass with a globe valve that is normally kept shut shall be provided around the trap.

16.3.1.7.6 A globe valve also shall be placed on each side of the trap between the bypass connections.

16.3.1.7.7 A gravity return shall be used only where the heater is located well above the boiler water level and where the steam pressure at the heater plus the static head of water in the return pipe between the heater and the boiler water level is greater than the steam pressure at the boiler.

16.3.1.7.8 Wherever it becomes necessary to return the condensate to a vacuum heating system, the layout shall have the approval of the makers of the heating specialties, as well as a final approval by the authority having jurisdiction.

16.3.1.8 Multiple Heaters.

16.3.1.8.1 Where two or more heaters are used, they shall be placed at one level and connected in parallel with symmetrical piping, with a relief valve and controlling valves in the waterlines of each.

16.3.1.8.2 A globe valve shall be placed in each steam supply line.

16.3.2 Gas-Fired Water Heaters.

16.3.2.1 A gas-fired water heater rated for the system water pressure shall be permitted to be used.

16.3.2.2 The heater shall be listed and shall have a permanent marking that indicates the input ratings in British thermal units (kilowatts).

16.3.2.3 The heater and accessories shall be installed in accordance with the manufacturers' recommendations and shall be provided with listed combustion safeguards.

16.3.2.4 The gas-fired water heater shall be equipped to prevent abnormal discharge of gas, in the event of ignition failure or accidental flame extinguishment, by automatic means that are specifically approved for the heater.

16.3.2.5 A high-limit switch shall be provided in the hot-water pipe close to the heater to shut off the gas supply automatically when the water temperature exceeds 190°F (87.8°C).

16.3.2.6 Thermostatic control of a burner with a temperature response element shall be located in the coldest water affected by atmospheric temperature, and a minimum water temperature of 5.6°C (42°F) shall be maintained.

16.3.3 Oil-Fired Water Heaters.

16.3.3.1 An oil-fired water heater rated for the system water pressure shall be permitted to be used.

16.3.3.2 The heater shall be listed and shall have a permanent marking that indicates the input rating in British thermal units (kilowatts).

16.3.3.3 The heater and accessories shall be installed in accordance with the manufacturers' recommendations and shall be provided with listed combustion safeguards.

16.3.3.4 The heater shall be equipped to prevent abnormal discharge of oil at the burner, in the event of ignition failure or accidental flame extinguishment, by automatic means that are specifically approved for the heater.

16.3.3.5 A high-limit switch shall be provided in the hot-water pipe to the heater to shut off the oil supply automatically when the water temperature exceeds 190°F (87.8°C).

16.3.3.6 Thermostatic control of the burner with a temperature response element shall be located in the coldest water affected by atmospheric temperature, and a minimum water temperature of 42°F (5.6°C) shall be maintained.

16.3.3.7 The oil tank shall be buried outside the heater house.

16.3.4 Coal-Burning Water Heaters.

16.3.4.1 A coal-burning water heater rated for the system water pressure shall be used.

16.3.4.2 Water shall circulate through a chamber, through a series of chambers, or through brass pipe coils around and over the fire.

16.3.4.3 The heater and accessories shall be installed in accordance with the manufacturers' recommendations and shall be provided with listed combustion safeguards.

16.3.5 Recirculating Electric Water Heaters.

Δ **16.3.5.1** An electric water heater shall be permitted to be used.

16.3.5.2 A water-circulating pump shall be used in conjunction with electric heating elements.

16.3.5.3 A single water heater or boiler of adequate capacity shall be permitted to be used.

16.3.5.4 To avoid sudden peak demands on the electric service, multiple heaters shall be installed in parallel *(see 16.3.1.8)*, with the various thermostatic controls set at different temperatures.

16.3.5.5 The system shall have adequate capacity to maintain a minimum water temperature of 42°F (5.6°C) when all heater elements are in operation.

16.3.5.6 Thermostatic control with a temperature response element shall be located in the coldest water affected by atmospheric temperature.

16.3.5.7 The hot-water pipe that is close to the heater shall include a manual reset high-limit control thermostat that disconnects all ungrounded electric conductors to the heater in the event that the water temperature exceeds the temperature of the high-limit thermostat [approximately 190°F (87.8°C)].

Δ **16.3.5.8** Electric heaters and accessories shall be listed and shall have a permanent marking that indicates the kilowatt capacity and shall be installed in accordance with the manufacturers' recommendations.

16.3.5.8.1 The installation of all electric wiring shall comply with *NFPA 70*.

N **16.3.6 Electric Immersion Heaters.**

N **16.3.6.1** An electric immersion heater shall be permitted to be used.

N **16.3.6.2** The heater shall be listed and shall have a permanent marking that indicates the input rating in British thermal units (kilowatts).

N **16.3.6.3** The installation of power and control wiring and supervision and overcurrent protection shall be in accordance with *NFPA 70*.

16.3.7 Vertical Steam Radiators.

16.3.7.1* A steam-heated vertical radiator system also shall be permitted to be used for tower heights over 100 ft (30.5 m).

16.3.7.1.1 Steam-heated vertical radiator systems for tower heights over 100 ft (30.5 m) shall use an open-ended pipe sleeve similar to the one shown in Figure B.1(u).

Δ **16.3.7.2** An accurate angle socket thermometer that has at least a 6 in. (152 mm) stem and that is calibrated as low as 30°F (−1.1°C) shall be permanently inserted through the plate and as far from the heating unit as possible.

16.3.7.2.1 An angle socket thermometer shall not be required for suction tanks with a maximum height of 25 ft (7.6 m).

16.3.7.3 The radiator shall consist of a steam pipe that shall be of a size needed to convey the steam needed under the worst conditions but that shall not be less than 1½ in. (40 mm).

16.3.7.4 The radiator shall be contained within a watertight condensing chamber of copper tubing, or of cast-iron, steel, or brass pipe; or it shall be contained within a suction tank.

16.3.7.5 The radiator shall have sufficient area to maintain the temperature of the coldest water at not less than 42°F (5.6°C). *(See A.16.3.1.)*

16.3.7.6 In the case of radiator heaters without a surrounding pipe sleeve *(see 16.3.7.10)*, surface water temperatures shall be ascertained by means of a listed temperature-detecting device.

16.3.7.7 The device shall have the temperature response element secured in a position approximately 3 ft (0.91 m) below the permanent fire service water level.

16.3.7.8 Where long-distance thermometers are used, the external tubing shall be supported at intervals of approximately 12 ft (3.7 m), and the indicating dial shall be located conveniently near grade in a weatherproof cabinet.

16.3.7.9 In the case of a high structure without a permanent fire-service water level, a circulating type of heating system or radiator heater with a sleeve shall be used with a socket thermometer that is located in the coldest water.

16.3.7.10 The radiator shall be supplied from a reliable source with at least 10 lb/in.^{2} (0.7 bar) of steam pressure. *(See A.16.3.1 for low-pressure steam.)*

16.3.7.10.1 Where steam pressure in excess of 100 lb/in.^{2} (6.9 bar) is available on the heater, a reducing valve shall be placed in the steam-supply pipe near the boiler header, and a relief valve that is set at 100 lb/in.^{2} (6.9 bar) shall be installed between the reducing valve and the heater.

16.3.7.10.2 The steam-supply pipe shall be a minimum of 1½ in. (40 mm) but shall be of a size to furnish the needed quantity of steam; it shall have a steam gauge with a siphon at a convenient location.

16.3.7.10.3 The steam supply and a return connection of at least ¾ in. (20 mm) from the base of the condensing chamber shall be provided with a trap arrangement, as shown in Figure 16.3.7.10.3.

16.3.7.10.3.1 A radiator that is supplied by a separately fired boiler that is located above grade near the tank shall not be required to be provided with the trap arrangement shown in Figure 16.3.7.10.3.

16.3.7.10.4 Other arrangements for disposing of condensate shall be permitted, provided approval is first obtained from the authority having jurisdiction.

16.3.7.11 Where a separately fired boiler that is located above grade near the tank supplies steam to the radiator, the inner pipe shall contain several ¼ in. (6.4 mm) holes below the water level of the boiler.

16.3.7.11.1 The steam-supply pipe shall pitch upward from the top of the nearby boiler to a connection to the inner pipe in the radiator, as shown in Figure 16.3.7.11.1.

16.3.7.12 The inner pipe for all radiator heaters shall extend to within approximately 1 ft (0.3 m) of the top of the condensing chamber.

16.3.7.12.1 The radiator sleeve and the reduced extension of the sleeve up into the main tank shall be adequately supported and braced at points not over 25 ft (7.6 m) apart.

16.3.8 Heating with Hot Water.

16.3.8.1 Hot water as a heating element in the coils or shell of a heater that is designed for steam shall not be used.

16.3.8.2 Hot water shall be permitted to be used where special permission is obtained from the authority having jurisdiction.

16.3.8.3 The complete detailed design of the heater, together with information regarding the temperature of the hot water, shall be submitted to the authority having jurisdiction, and approval shall be received before the equipment is installed.

16.3.9 Steam Coils Inside Tanks.

16.3.9.1 The coil shall consist of at least 1¼ in. (32 mm) brass or copper pipe or 2 in. (50 mm) steel pipe.

16.3.9.2 The pipe shall be pitched to drain and shall be supplied with steam, at not less than 10 lb/in.^{2} (0.7 bar) pressure, through a pipe of sufficient size to furnish the needed quantity of steam from a reliable source.

16.3.9.3 A globe valve and a steam gauge with a siphon shall be placed in the steam supply line.

16.3.9.4 The coil shall be supported and, together with the supply and return pipes, shall have provision for expansion.

16.3.9.5 The return shall be connected to a steam trap.

16.3.9.6 Where the tank is elevated, the steam pipes shall be placed inside the frostproof casing around the discharge pipe. *(See 16.1.5.)*

16.3.9.7 The coil shall contain an area of heating surface to maintain the temperature of the coldest water at not less than 42°F (5.6°C). *(See A.16.3.1.)*

16.3.9.8 The coil shall be placed within approximately 3 ft (0.91 m) of the shell and shall be sized for a maximum steam velocity of 8000 ft/min (2438 m/min) so that the pressure drop does not exceed one-half of the initial inlet pressure.

Δ **16.3.9.9** The surface water temperatures for gravity tanks, and suction tanks shall be ascertained by means of a listed temperature-detecting device.

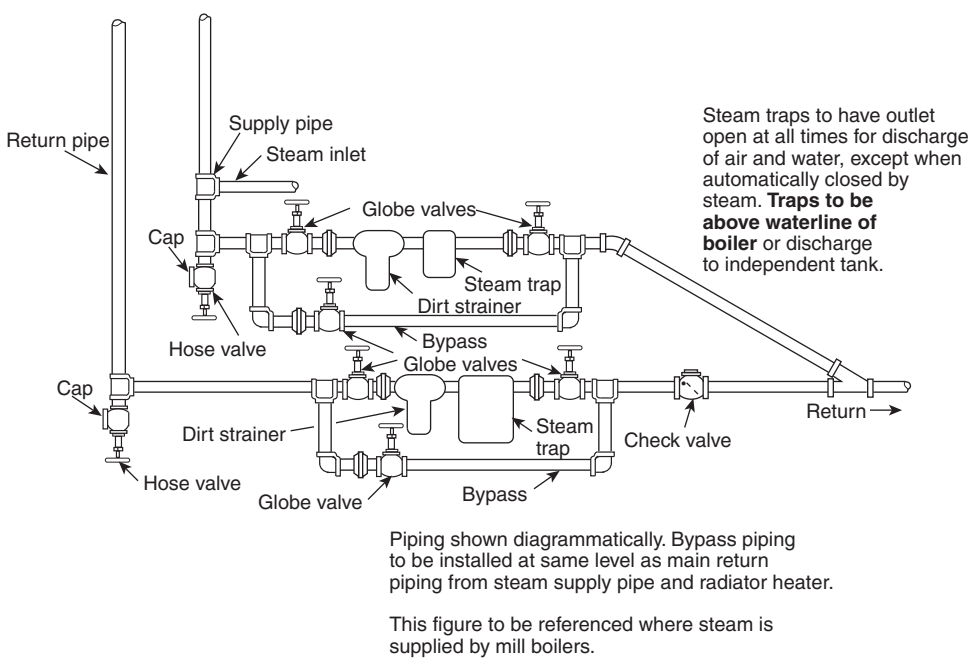

FIGURE 16.3.7.10.3 Steam Trap Arrangement.

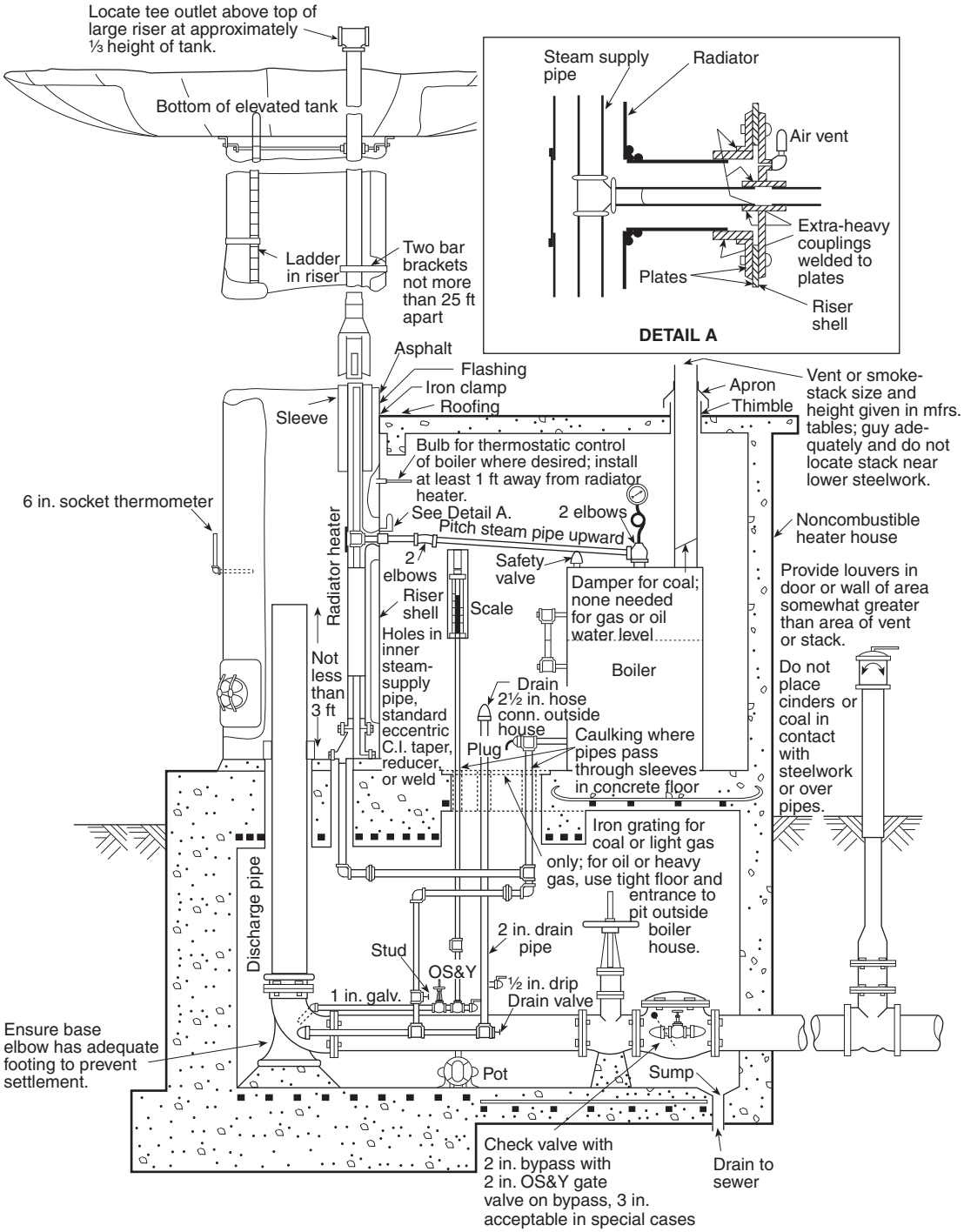

For SI units, 1 in. = 25.4 mm; 1 ft = 0.3048 m.

FIGURE 16.3.7.11.1 Aboveground Steam Boiler Radiator Heater Arrangement.

16.3.9.10 The device shall have the temperature response element secured in a position approximately 3 ft (0.91 m) below the permanent fire-service water level.

16.3.9.11 Where long-distance thermometers are used, the external tubing shall be supported at intervals of approximately 12 ft (3.7 m), and the indicating dial shall be located conveniently near grade in a weatherproof cabinet.

16.3.9.12 In the case of a high structure without a permanent fire-service water level, a circulating type of heating system or

radiator heater with a sleeve shall be used with a socket thermometer that is located in the coldest water.

16.3.9.13 Any exception to these provisions shall require approval from the authority having jurisdiction.

16.3.10 Direct Discharge of Steam.

16.3.10.1 Where blowing steam directly into the tank from a supply, a pipe of not less than 1 in. (25 mm) in diameter shall be used.

16.3.10.2 The steam pipe shall extend inside the frostproof casing and through the bottom to a point above the maximum water level, and then it shall extend horizontally for a short distance.

16.3.10.3 An air vent and a check valve shall be provided to keep the water from siphoning back and then downward to a point 3 ft or 4 ft (0.9 m or 1.2 m) below the normal fire-service water level.

16.3.10.4 The section of the pipe that is inside the tank shall be of braced brass or copper. A ½ in. (15 mm) drip valve shall be provided at the base of the steam pipe.

16.3.11 Solar Heating.

16.3.11.1 Tanks shall be permitted to be equipped with solar heating to reduce the consumption of other forms of heating energy.

16.3.11.2 A solar-heated tank shall have a backup heating system, as described in this chapter.

16.4 Tank Insulation.

16.4.1 Where permitted by the authority having jurisdiction, tanks shall be permitted to be insulated to conserve energy.

16.4.2 Insulation materials shall be listed and shall be installed with protection against fire, exposure, corrosion, and weather.

16.4.3 Heating requirements shall be based on design information in accordance with the *ASHRAE Handbook — Fundamentals*.

16.4.4 Outside winter design temperatures shall be in accordance with Figure 16.1.4.

16.4.5 Heat-loss calculations shall be based on an average water temperature of 55°F (12.8°C).

16.5 Heating for Embankment-Supported Coated Fabric Suction Tanks.

16.5.1 If tanks are located where the lowest mean temperature for one day is less than 5°F (−15°C), as shown in Figure 16.1.4, a water-recirculating system with a heat exchanger/heater shall be provided and installed according to the heater manufacturer's recommendations.

16.5.2 The heat exchanger/heater shall be plainly marked with a plate that indicates the British thermal unit (kilowatt) input.

16.5.3 A fitting for the water-recirculation line shall be located in the bottom of the tank diagonally opposite from the concrete sump that contains the inlet/outlet for the tank. *[See Figure B.1(g) for a typical installation.]*

Δ **16.5.4** The heater shall have a British thermal unit (kilowatt) per hour capacity in accordance with Figure 16.1.4 for determination of heater capacity.

16.5.5 When the ambient air temperature drops below 42°F (5.6°C), a thermostat shall activate a pump that draws water from the tank through the inlet/discharge and pumps the water back into the tank through the recirculation fitting.

16.5.6 When the temperature of the water flowing through the inlet/discharge line in the pump house drops below 44°F (6.7°C), a second thermostat shall activate a heat exchanger/heater.

16.5.7 The heat exchanger/heater shall be located in a valve pit. *[See Figure B.1(g) for a typical installation.]*

16.5.8 The valve pit temperature shall be maintained above freezing at all times.

16.5.9 The recirculation pipe shall be not less than 2 in. (50 mm).

16.5.10 The size of the pipe required shall be a function of the tank size and the winter weather conditions that prevail at the site, as indicated in Figure 16.1.4.

Chapter 17 Acceptance Test Requirements

17.1 Inspection of Completed Equipment.

17.1.1 Prior to placing the tank in service, a representative of the tank contractor and a representative of the owner shall conduct a joint inspection of the completed equipment.

17.1.1.1 The authorities having jurisdiction shall be notified as to the time and place of the inspection.

17.1.2* Written reports of completed equipment inspections shall be made in triplicate, and a copy that has been signed by the contractors and the owners shall be sent to the authority having jurisdiction.

17.2 Testing.

17.2.1 All coated steel tanks shall be tested for holidays and coating thickness.

17.2.2 Corrective action shall be completed prior to acceptance.

17.3 Welded Steel Tanks.

17.3.1 Flat Bottoms. Upon completion of the welding of the tank bottom, it shall be tested by one of the following methods and shall be made entirely tight:

(1) Air pressure or vacuum applied to the joints, using soap suds, linseed oil, or other suitable material for the detection of leaks
(2) Joints tested by the magnetic particle method

17.3.2 General. Upon completion of the tank construction, it shall be filled with water furnished at the tank site by the owner's representative using the pressure necessary to fill the tank to the maximum working water level.

17.3.3 Any leaks in the shell, bottom, or roof (if the roof contains water) that are disclosed by the test shall be repaired by chipping or melting out any defective welds and then rewelding.

17.3.4 Repair work shall be done on joints only when the water in the tank is a minimum of 2 ft (0.6 m) below the point under repair.

17.3.5 The tank shall be tested as watertight to the satisfaction of the authority having jurisdiction and/or the owner's representative.

17.4* Bolted Steel Tanks. The completed tank shall be tested by filling it with water, and any detected leaks shall be repaired in accordance with AWWA D103.

17.5 Pressure Tanks. Tests shall be performed according to 17.5.1 through 17.5.4.

17.5.1 Each pressure tank shall be tested in accordance with the ASME *Boiler and Pressure Vessel Code*, "Rules for the Construction of Unfired Pressure Vessels," before painting.

17.5.1.1 The hydrostatic test pressure shall be a minimum of 150 lb/in.^{2} (10.3 bar).

17.5.2 In addition to the ASME tests, each pressure tank shall be filled to two-thirds of its capacity and tested at the normal working pressure with all valves closed and shall not lose more than ½ psi (0.03 bar) pressure in 24 hours.

17.5.3 A certificate signed by the manufacturer that certifies that the foregoing tests have been made shall be filed with the authority having jurisdiction.

17.5.4 A repetition of the tests specified in 17.5.1 through 17.5.3 shall be required after the tank has been set in place and connected. Where conditions do not allow shipping the tank after it is assembled, these tests shall be conducted following its assembly in the presence of a representative of the authority having jurisdiction.

17.6 Embankment-Supported Coated Fabric Tanks.

17.6.1 The tank shall be tested for leakage prior to shipment.

17.6.2 The tank also shall be tested for leakage after installation.

17.7 Concrete Tanks.

17.7.1 Leakage Testing. On completion of the tank and prior to any specified backfill placement at the footing or wall, the test specified in 17.7.2 through 17.7.4 shall be applied to ensure watertightness.

17.7.2 Preparation. The tank shall be filled with water to the maximum level and left to stand for at least 24 hours.

17.7.3 Measurement. The drop in liquid level shall be measured over the next 72-hour period to determine the liquid volume loss. Evaporative losses shall be measured or calculated and shall be deducted from the measured loss to determine whether there is net leakage.

17.7.4 There shall be no measurable leakage after the tank is placed in service.

17.8 Wood Tanks.

17.8.1 Wood tanks shall be filled and tested for liquid tightness for 48 hours.

17.8.2 Testing shall be done under the supervision of a qualified wood tank specialist.

17.8.3 Tests shall be in accordance with the National Wood Tank Institute Bulletin S82.

17.9 Fiberglass-Reinforced Plastic Tanks — Hydrostatic Test.

17.9.1 After the excavation hole is backfilled to the bottom of the influent and effluent piping, influent and effluent piping shall be sealed off with watertight caps or plugs.

17.9.2 The tank shall be filled with water up to 3 in. (76 mm) into the access openings.

17.9.3 The water shall be allowed to stand in the tank for a minimum of 2 hours.

17.9.4 The tank shall be examined for leakage or drop in water elevation.

17.9.5 If the water level drops, plugs or caps sealing off piping shall be checked to see that they are tight.

17.9.6 If tightening is required, more water shall be added to fill air voids back to the standard testing level.

17.9.7 The tank shall show no visible signs of leakage, and the water level shall stabilize within a 2-hour test period.

17.10 Disposal of Test Water. The owner's representative shall provide a means for disposing of test water up to the tank inlet or drain pipe.

17.11 Anti-Vortex Plate Inspection.

17.11.1 After completion of the tank construction, and before filling the tank with water, the anti-vortex plate shall be inspected.

17.11.2 The inspection shall verify that the horizontal steel plate and long radius elbow meet the requirements of 14.2.13.2 and are installed in accordance with 14.2.13.3.

17.11.3 The inspection results shall be included in the written report specified in 17.1.2.

Chapter 18 Inspection, Testing, and Maintenance of Water Tanks

18.1 General. Tanks shall be periodically inspected, tested, and maintained in accordance with NFPA 25.

Annex A Explanatory Material

Annex A is not a part of the requirements of this NFPA document but is included for informational purposes only. This annex contains explanatory material, numbered to correspond with the applicable text paragraphs.

A.3.2.1 Approved. The National Fire Protection Association does not approve, inspect, or certify any installations, procedures, equipment, or materials; nor does it approve or evaluate testing laboratories. In determining the acceptability of installations, procedures, equipment, or materials, the authority having jurisdiction may base acceptance on compliance with NFPA or other appropriate standards. In the absence of such standards, said authority may require evidence of proper installation, procedure, or use. The authority having jurisdiction may also refer to the listings or labeling practices of an organization that is concerned with product evaluations and is thus in a position to determine compliance with appropriate standards for the current production of listed items.

A.3.2.2 Authority Having Jurisdiction (AHJ). The phrase "authority having jurisdiction," or its acronym AHJ, is used in NFPA documents in a broad manner, since jurisdictions and approval agencies vary, as do their responsibilities. Where public safety is primary, the authority having jurisdiction may be a federal, state, local, or other regional department or individual such as a fire chief; fire marshal; chief of a fire prevention bureau, labor department, or health department; building official; electrical inspector; or others having statutory authority. For insurance purposes, an insurance inspection department, rating bureau, or other insurance company representative may be the authority having jurisdiction. In many circumstances, the property owner or his or her designated agent assumes the role of the authority having jurisdiction; at government installations, the commanding officer or departmental official may be the authority having jurisdiction.

A.3.2.4 Listed. The means for identifying listed equipment may vary for each organization concerned with product evaluation; some organizations do not recognize equipment as listed unless it is also labeled. The authority having jurisdiction should utilize the system employed by the listing organization to identify a listed product.

N **A.3.3.2.1 Bladder Tank.** The industry sometimes references the term *pillow tank*, and some manufacturers interchange the terms *bladder tank* and *pillow tank*. A pillow tank is a nonpressurized flexible tank. This definition does not refer to a pillow tank.

N **A.3.3.2.3 Gravity Tank.** A gravity tank might be capable of providing the necessary head pressure to operate a fire suppression system or used to provide water to a fire pump.

N **A.3.3.2.4 Pressure Tank.** A tank riser can also serve as the discharge pipe for the tank. See Figure B.1(j).

N **A.3.3.3 Tank Riser.** A tank riser can also serve as the discharge pipe for the tank.

A.4.1.1 Where tanks supply fire protection systems, see NFPA water-based standards such as NFPA 11, NFPA 13, NFPA 14, NFPA 15, NFPA 16, NFPA 20, and NFPA 24.

N **A.4.1.4** Careful consideration should be given to determining tank capacity. In addition to the required fire flow and duration requirements of water-based system standards, the permitted fluctuations of the water-level sensors — 12 in. (300 mm) below normal for evaporation and closure time for the fill valve *(see Section 14.9)* — and maintaining a reasonable amount of water in the bottom of suction tanks to prevent cavitation of fire pumps should be factored into the overall tank size.

For example, assume a suction tank is supplying a system with a 1000 gpm (3785 L/min) demand:

[A.4.1.4a]

$$\text{System design} = 1000\ \text{gpm} \times 30\ \text{min} = 30{,}000\ \text{gal}$$
$$(3785\ \text{L/min} \times 30\ \text{min} = 113{,}550\ \text{L})\ \text{required}$$

Assuming a 20 ft (6.1 m) diameter suction tank, the tank would hold approximately 2349 gal per ft (8891.9 L) of tank height:

[A.4.1.4b]

$$(v = \pi r^2 h) = \pi(10)^2(1) \times 7.48\ \text{gal/ft}^3\ (999.9\ \text{L/m}^3) = 2349\ \text{gal}\ (8891.9\ \text{L})$$

Given a 1 ft (0.305 m) variation between the fill sensor and overflow connection, 2349 gal (8891.9 L) would have to be added to the tank capacity. Further assuming that the minimum water level should be approximately equal to the centerline of the suction pipe to prevent fire pump cavitation, another 3948 gal (14,944.8 L) should be added.

[A.4.1.4c]

$$\text{Volume} = \pi(10)^2(1.68) \times 7.48\ \text{gal/ft}^3\ (999.9\ \text{L/m}^3) = 3948\ \text{gal}\ (14{,}944.8\ \text{L})$$

[A.4.1.4d]

$$3948\ \text{gal}\ (14{,}944.8\ \text{L}) + 2349\ \text{gal}\ (8891.9\ \text{L}) = 6297\ \text{gal}\ (23{,}836.7\ \text{L})$$

Adding 6297 gal (23,836.7 L) to the system design requirement of 30,000 gal (113,550 L) brings the total needed capacity to 36,297 gal (137,486.7 L) or a 40,000 gal (151,416 L) tank (based on standard tank sizes).

A.4.2.1 Fire exposure risk to a water tank should take into account locations that could be threatened by wildland fire. See NFPA 1144 for more information.

A.4.8.2 See Figure A.4.8.2.

A.4.14.1 Rules for slopes can be found in 5.4.3 of AWWA D100.

•

A.5.4.1 In accordance with AWWA D100, the oiled sand mixture should consist of approximately 18 gal (68 L) of No. 2 fuel oil per cubic yard (cubic meter) of sand. In practice, quantities of 6 gal to 9 gal (22.7 L to 34 L) of oil per cubic yard (cubic meter) of sand have been shown to be acceptable.

•

A.6.1.1 For further information on bolted steel tanks, see AWWA D103.

•

A.7.1.4.2 Pressure tanks must contain a volume of air that, when pressurized, pushes the water out of the tank *(see Figure A.7.1.4.2)*. The larger the quantity of air, the less pressure is necessary to push the water out of the tank. To size a pressure tank properly for a hydraulically calculated fire sprinkler system, determine where you are going to locate the tank, calculate the demand of the fire protection system to the discharge flange of the tank, and then select a volume of tank larger than what is needed to meet the flow and duration demand of the fire protection system. Next, calculate the pres-

FIGURE A.4.8.2 Confined Space Entry Sign.

sure necessary to push the water out of the tank and maintain the pressure demand in the fire protection system. If the pressure necessary to be held in the tank is higher than the pressure rating of the fire protection system components, select a larger tank. Finally, convey to the owner the ratio of water to air that must be kept in the tank and the minimum tank pressure for maintenance purposes. A formula that can be used for determining the pressure at which the tank needs to be held is:

$$P_i = (P_f + 15)/A - 15$$

where:

P_i = tank pressure

P_f = pressure demand of the fire protection system calculated to the discharge flange of the tank

A = percentage of the volume of the tank set aside for air, expressed as a decimal (e.g., 50 percent would be expressed as "0.5")

For example, consider a light hazard sprinkler system with a duration demand of 30 minutes and a demand of 125 gpm at 55 psi calculated to the discharge flange of the tank. If a 5000 gal tank was used and filled 75 percent with water, this would meet the 3750 gal duration demand of the sprinkler system (125 × 30 = 3750). The remaining 25 percent of the volume of the tank would be available for air, and the tank would need to be pressurized to 265 psi as calculated below:

$$P_i = (P_f + 15)/A - 15 = (55 + 15)/0.25 - 15 = 265$$

Clearly this pressure is too high for a sprinkler system where most of the components are rated for a maximum of 175 psi. Unless high pressure rated components are going to be used, a larger tank should be considered. For this same sprinkler system, a 7000 gal tank could be used and filled with 3750 gal of water (54 percent water and 46 percent air). This tank would only need to be pressurized to 137 psi, calculated as follows:

$$P_i = (P_f + 15)/A - 15 = (55 + 15)/0.46 - 15 = 137$$

This would clearly be a better selection of a tank for this fire protection system. Note that the owner will need to know where the 3750 gal fill point of the tank is. If the tank is overfilled, then the quantity of air will be decreased and the pressure of 137 psi will be insufficient to push the water out of the tank at the proper pressure.

Tanks above fire protection systems have the advantage of needing less pressure because the water will gain pressure as it drops out of the tank. However, putting tanks above the fire protection system is not always possible. Tanks in basements will work fine if the pressure is calculated correctly.

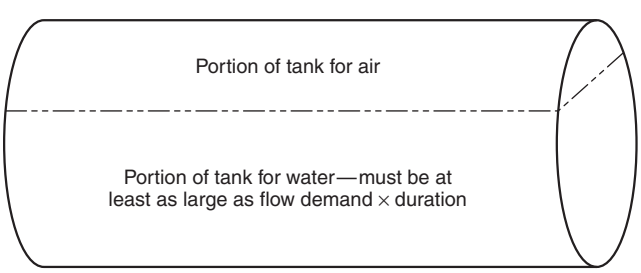

FIGURE A.7.1.4.2 Pressure Tank.

A.7.1.5 The condition known as *air lock* can occur when a pressure tank and a gravity tank are connected into the sprinkler system through a common tank riser and the gravity water pressure at the gravity-tank check valve is less than the air pressure trapped in the pressure tank and common tank riser by a column of water in the sprinkler system after water has been drained from the pressure tank. For example, if the pressure tank is kept two-thirds full of water with an air pressure of 75 lb/in.^{2} (5.2 bar) as usual, and a sprinkler opens 35 ft (10.7 m) or more above the point where the common tank riser connects to the sprinkler system, the pressure tank drains, leaving an air pressure of 15 lb/in.^{2} (1.0 bar) that is balanced by a column of water of equal pressure [35 ft (10.7 m) head] in the sprinkler system; the gravity-tank check valve is held closed unless the water pressure from the gravity tank is more than 15 lb/in.^{2} (1.0 bar) [35 ft (10.7 m) head].

Air lock can be prevented by increasing the volume of water and decreasing the air pressure in the pressure tank so that little or no air pressure remains after the water has been exhausted. For example, if the pressure tank is kept four-fifths full of water, with an air pressure of 60 lb/in.^{2} (4.1 bar), the air pressure that remains in the tank after the water is drained is zero, and the gravity-tank check valve opens as soon as the pressure from the pressure tank of the gravity-tank check valve drops below the static head from the gravity tank.

Under normal conditions, air lock can be conveniently prevented in new equipment by connecting the gravity tank and pressure tank discharge pipes together at 45 ft (13.7 m) or more below the bottom of the gravity tank and placing the gravity-tank check valve at the level of the connection.

A.7.1.7.1 The ASME *Code* permits the fusion process of welding with certain regulations for strength, qualification of welders, and tests.

A.7.1.10.3 See Figure B.1(a).

A.7.2.3.2 See Figure B.1(a) and Figure B.1(b).

A.7.2.12 See 14.1.1.

A.8.1.3 Tanks of other sizes are built.

A.8.1.4.4 See 8.6.3.

A.8.2.2.2 Fir and red cedar deteriorate rapidly, especially if the water is overheated during the heating season. Western yellow cedar, redwood, or southern white cedar (dismal swamp) should be used, as the increased serviceability ordinarily more than offsets the slightly greater cost of the complete installation. *(See 16.1.9.)*

A.8.4.1 See Section 13.4 for unit working stresses for steel supporting construction.

A.8.5.3 *Example:* A 1 in. (25 mm) hoop that is located 13.5 ft (4.1 m) down from the top of a 22 ft (6.7 m) diameter tank. What is the allowable spacing? *[See Figure A.8.5.3(a) and Figure A.8.5.3(b).]* At the point for 13.5 ft (4.1 m) depth, follow the broken line vertically to 22 ft (6.7 m) diameter, then follow horizontally to the point for a 1 in. (25 mm) hoop diameter, then follow vertically down to the 8.9 in. (226 mm) spacing. One-half of the sum of the actual distances to the next hoop above and below should not exceed 8.9 in. (226 mm) plus the tolerance.

Tolerances: The design spacing can exceed the computed spacing by a maximum of ½ in. (12 mm). The spacing, as installed, can exceed the computed spacing by a maximum of 1 in. (25 mm). *[See Figure A.8.5.3(a) and Figure A.8.5.3(b).]*

Typical hoop schedules for standard size tanks are shown in Figure A.8.5.3(a), based on the area at the root of the cut threads.

A.8.5.3.2 See Figure A.8.5.3(b) for hoop spacing for wood tanks.

A.8.6.1 A fore plane can be used for smoothing the edges.

A.8.7.3 See Figure B.1(d).

A.9.5.1 See Figure B.1(e).

A.9.6.2.4 See Figure B.1(h).

A.11.2 See Figure A.11.2 for an example of a fiberglass tank being used under ground as a cistern to supply fire flow for fire department apparatus in a rural area.

A.11.3 The standard capacities shall be from 2000 gal to 50,000 gal (7.6 m^3 to 190 m^3). Tanks of other capacities are permitted.

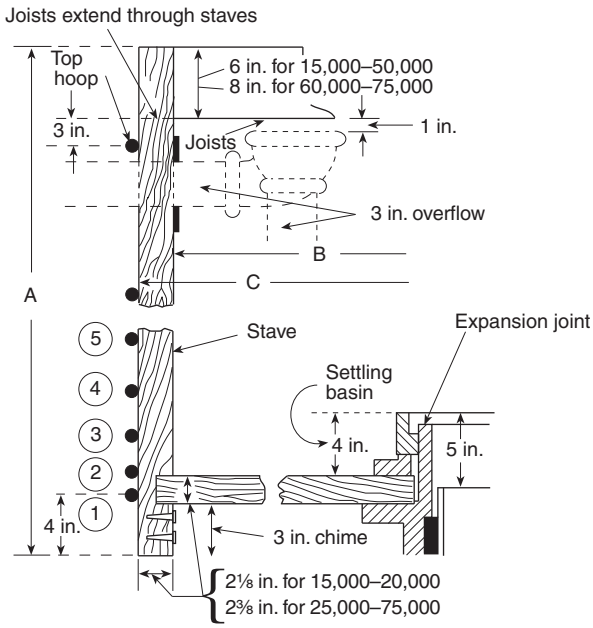

Tank Dimensions				
Net Capacity (gal)	Stave Length A	Inside Diam B	Outside Diam C	Approx. Outside Cir
15,000	14 ft 0 in.	14 ft 2½ in.	14 ft 7 in.	45 ft 9¾ in.
20,000	16 ft 0 in.	15 ft 3½ in.	15 ft 8 in.	49 ft 2¾ in.
25,000	16 ft 0 in.	17 ft ½ in.	17 ft 6 in.	54 ft 11¾ in.
30,000	18 ft 0 in.	17 ft 6½ in.	18 ft 0 in.	56 ft 6¾ in.
40,000	20 ft 0 in.	19 ft 1½ in.	19 ft 7 in.	61 ft 6¼ in.
50,000	20 ft 0 in.	21 ft 6½ in.	22 ft 0 in.	69 ft 1½ in.
60,000	20 ft 0 in.	23 ft 6½ in.	24 ft 0 in.	75 ft 4¾ in.
75,000	24 ft 0 in.	23 ft 10½ in.	24 ft 4 in.	76 ft 5¼ in.

For SI units, 1 in. = 25.4 mm; 1 ft = 0.3048 m; 1 gal = 0.00379 m^3.

Distances between hoops (in.)								
Number of hoops starting at bottom	Net capacity (U.S. gal)							
	15,000	20,000	25,000	30,000	40,000	50,000	60,000	75,000
29		NB: Top distance is measured from the top hoop to the underside of the joists.						3
28								21
27								21
26								19
25								18
24							3	14
23						3	21	12
22					3	21	20	12
21					21	21	18	12
20				3	19	18	15	12
19				21	15	18	15	10
18				18	15	15	14	10
17				18	12	15	12	10
16		3	3	15	12	12	11	9
15		21	21	15	10	12	10	9
14	3	18	18	14	9	10	9	8
13	21	18	18	12	9	10	9	8
12	21	15	15	11	9	9	8	8
11	19	15	15	10	9	9	8	7
10	15	15	15	9	9	8	7	7
9	13	12	12	9	9	8	7	7
8	12	12	12	8	9	8	7	7
7	11	11	10	8	8	7	7	6
6	10	10	10	8	8	7	6	6
5	9	9	9	7	8	7	6	6
4	9	9	9	7	7	6	6	6
3	8	8	8	7	6	4	6	6
2	7	6	7	6	2	2	3	2
1	4	4	4	4	4	4	4	4

4 ¾ in. hoops; 10 ⅞ in. hoops; 4 ⅞ in. hoops; 7 1 in. hoops; 13 ¾ in. hoops; 10 ⅞ in. hoops; 5 ¾ in. hoops; 4 ¾ in. hoops; 11 ⅞ in. hoops; 15 ⅞ in. hoops; 12 1 in. hoops; 18 1 in. hoops; 19 1 in. hoops; 21 1⅛ in. hoops

Bottom of stave

FIGURE A.8.5.3(a) Hoop Schedules for Wood Tanks (dimensions are for cylindrical tanks).

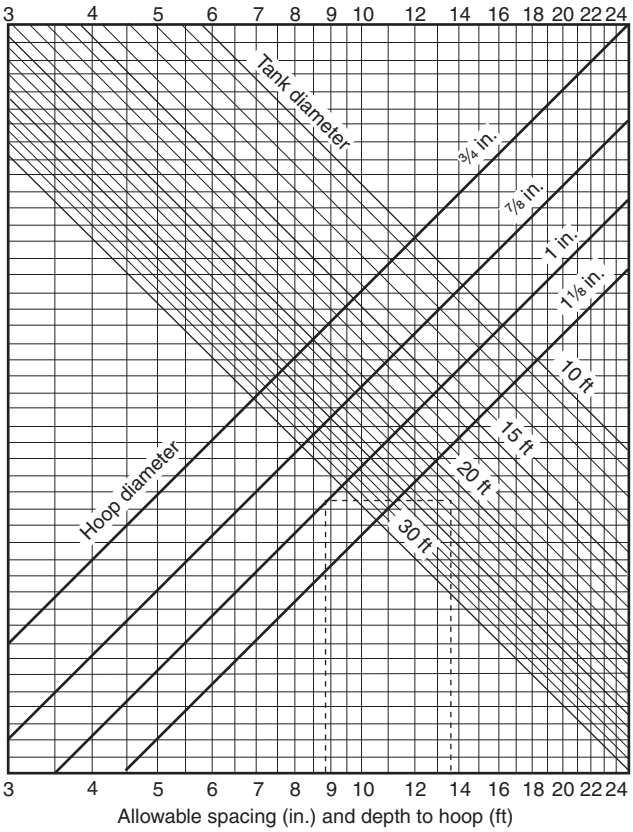

For SI units, 1 in. = 25.4 mm; 1 ft = 0.3048 m.

FIGURE A.8.5.3(b) Hoop Spacing Diagram for Wood Tanks.

A.11.7.2 See Figure A.11.7.2 for an example of a combination vent and sight assembly, which allows the tank to stay at atmospheric pressure while allowing the user to know the water level in the tank. While these two devices are not required to be combined, it is convenient since they are both required to be above ground.

A.11.7.3 See Figure A.11.7.3.

A.11.7.4 See Figure A.11.7.4.

A.12.6.1.1 The necessary depth is usually 20 ft to 30 ft (6.1 m to 9.1 m).

A.13.1.1 *Fireproofing Tank Towers. (See Section 4.3 for locations where fireproofing is needed.)*

Fireproofing, where necessary, is usually not installed by the tank contractor. One acceptable method of fireproofing steel columns consists of concrete that is poured 2 in. (51 mm) outside all projecting steel. One method of construction is to spirally wind 4.62 mm (No. 5 B & S gauge) steel wire at a pitch of 8 in. (203 mm) around the section and then to erect wooden forms that are approximately 6 ft (1.8 m) high, filling and tamping before erecting the next 6 ft (1.8 m) section.

The best coarse aggregates, arranged in order of preference, are limestone or calcareous gravel, trap rock, granite, sandstone, and hard coal cinders of less than 1 in. (25.4 mm). A 1:2:4 mixture of portland cement, clean sand, and one of the specified coarse aggregates should be used.

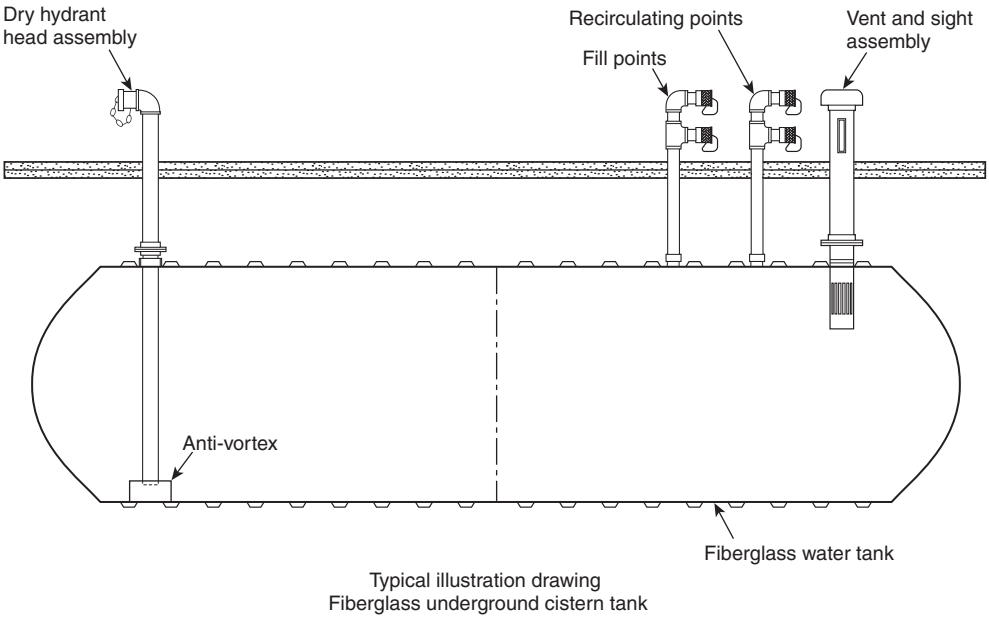

FIGURE A.11.2 Fiberglass Tank as an Underground Cistern.

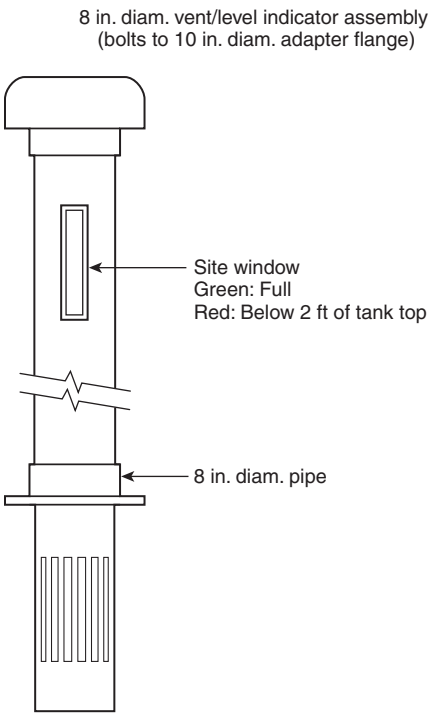

For SI units, 1 in. = 25.4 mm; 1 ft = 0.3048 m.

FIGURE A.11.7.2 Typical Combination Vent and Sight Assembly.

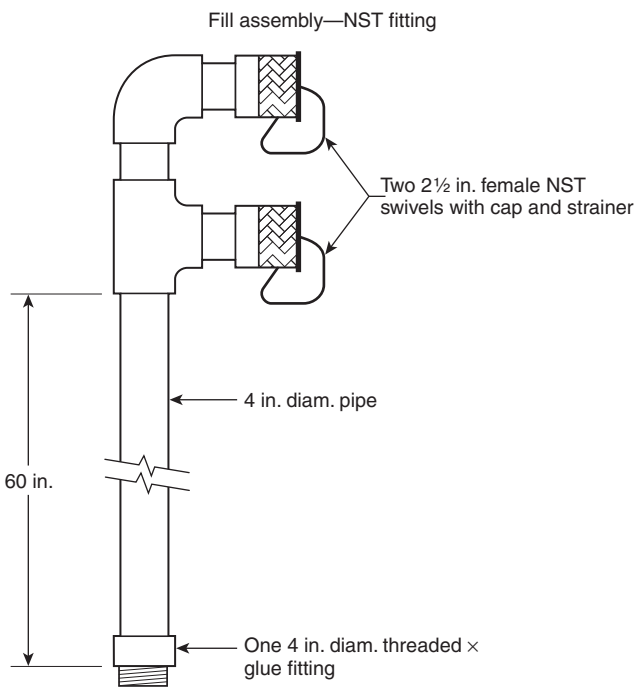

For SI units, 1 in. = 25.4 mm.

FIGURE A.11.7.3 Typical Fill Assembly.

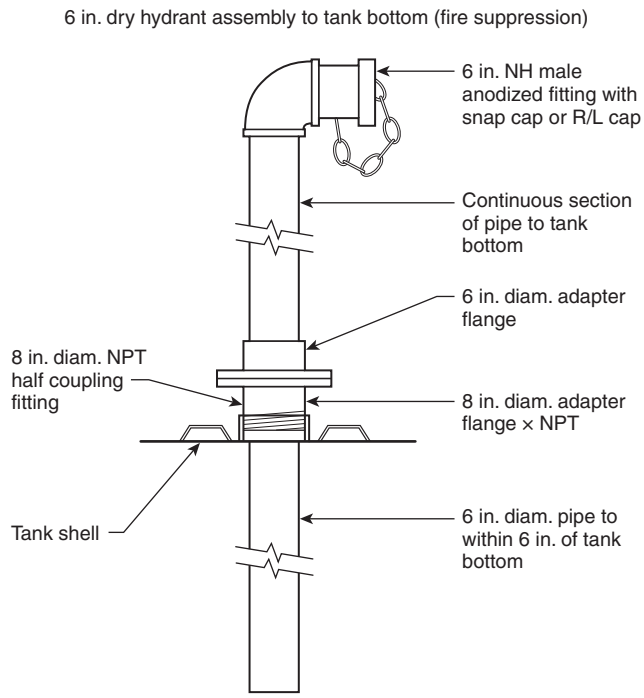

For SI units, 1 in. = 25.4 mm.

FIGURE A.11.7.4 Typical Dry Hydrant Assembly.

Another method of construction consists of winding 4 ft or 5 ft (1.2 m or 1.5 m) lengths of expanded metal around the section, the mesh taking the place of wooden forms and wire ties. The concrete should be of relatively dry consistency, however, so that it does not escape from the mesh. The mesh should be separated by approximately 1 in. (25.4 mm) from the steel by means of spacers so that the concrete completely surrounds the steel. The ends of the mesh should be lapped and securely wired together. After the concrete has set, a 1 in. (25.4 mm) layer of portland cement mortar is trowelled onto the outside of the mesh.

Ordinarily, columns are nearly vertical so that the weight of concrete fireproofing does not cause significant bending stresses. The vertical load is carried by the foundations. Where columns are significantly inclined, reinforcing bars should be placed in the concrete and should be designed so that the fireproofing is self-supporting.

Fireproofing should extend continuously through the floors and roof of a building. The extreme top of the concrete should be thoroughly flashed with asphalt, including all exposed junctions between steel and concrete. Concrete surfaces exposed to freezing temperatures should be coated with special waterproof paint that is suitable for concrete surfaces to prevent spalling.

Horizontal struts and compression portal braces should also be encased in solid concrete that is poured 2 in. (51 mm) outside all projecting steel. Wooden forms and wire ties are necessary, and reinforcing rods should be located near the bottom of the section and should be designed so that the fireproofing is self-supporting. Care should be taken in designing the supports for the forms, as compression members are not usually of sufficient strength to safely resist bending. Where any of the struts are used for supporting forms, their strength should be carefully investigated by a consulting structural engineer.

Cement plaster on metal lath has not proven to be satisfactory out-of-doors or in moist locations, due to unobserved corrosion of the steel sections.

Diagonal wind rods or tension portal members are not usually fireproofed, since they are less subject to failure when heated than the compression members. Where very severe exposure exists, a weatherproof fire-resistant coating should be applied over heavily painted rods. Special care is needed to make such fireproofing watertight at turnbuckles and clevises. Concrete has been used occasionally, but wire ties or coarse rectangular mesh is necessary to prevent serious cracking and deterioration of the fireproofing.

Wooden frostproof casings are not usually fireproofed. Some casings have completely burned away from steel tanks without damaging the tower or tank but necessitating the replacement of the tank riser pipes. Grillage beams under a wood tank might possibly fail during a serious fire that involves the frostproof casing. Wooden casings, unless treated with a preservative, usually rot and need replacement at 8- to 14-year intervals. This period is unlikely to be lengthened by the presence of cement plaster fireproofing.

Noncombustible frostproof casings are desirable for wood tanks. In the case of steel tanks, 3 ft (0.91 m) diameter steel tank risers are satisfactory and do not require fireproofing. In the case of high tank risers, it is necessary to strengthen the valve pit roof.

Alternate protection for tank towers in lieu of concrete may consist of open sprinklers where water supplies are sufficient and watch service and other conditions are satisfactory to the authority having jurisdiction.

A.13.7.6 The interior of hermetically sealed surfaces, including such tubular columns, should not need to be painted.

A.14.1 For embankment-supported coated fabric suction tanks, see Section 9.6.

A.14.1.3 Wood tanks can be extensively damaged by shrinkage if left empty after they are erected.

A.14.1.6 One of the chief advantages of the gravity circulation system of heating tanks is that it enables convenient observation of the temperature of the coldest water at a thermometer located in the cold-water return pipe near the heater. Failure to provide an accurate thermometer at this point or failure to observe it daily and ensure that it registers the proper temperature forfeits this advantage and can result in the freezing of the equipment. *[See Figure 16.1.7.5.5(a) and Figure 16.1.7.5.5(b), Figure B.1(i) through Figure B.1(k), and Figure B.1(s), Figure B.1(t), and Figure B.1(v).]*

•

N **A.14.1.7** The use of a tank, in part, for purposes other than fire protection, is not advised. Frequent circulation of the water results in an accumulation of sediment that can obstruct the piping of sprinklers, and a fluctuating water level hastens decaying of wood and corrosion of steel.

N **A.14.1.7.1.1** See Figure A.14.1.7.1.1.

A.14.1.7.4 See 14.1.7.

A.14.1.7.5 See 14.1.1.

•

A.14.1.8 *Water-Level Gauges.* The following information is provided for existing installations where mercury gauges are in use. Mercury gauges are no longer permitted for new installations.

(1) *Mercury Gauge Materials.* Pipe and fittings that contain mercury should be iron or steel. Brass, copper, or galvanized parts, if in contact with mercury, are amalgamated, and leaks result.

(2) *Water Pipe.* The water pipe to the mercury gauge should be 1 in. (25 mm) galvanized throughout and connected into the discharge pipe on the tank side of the check valve. Where possible, the pipe should be short, should be run with a continual upward pitch toward the tank piping, and should be without air pockets to avoid false readings. The pipe should be buried well below the frost line or located in a heated conduit.

(3) *Valves.* The valve at the mercury gauge should be a listed OS&Y gate valve. An additional listed OS&Y gate valve should be installed close to the discharge pipe where the distance to the mercury gauge exceeds 50 ft (15.2 m).

(4) *Mercury Catcher.* Occasionally, fluctuating water pressures require a mercury catcher at the top of the gauge glass to prevent loss of mercury. The catcher is not a standard part of the equipment and is not furnished by the gauge manufacturer unless specially ordered.

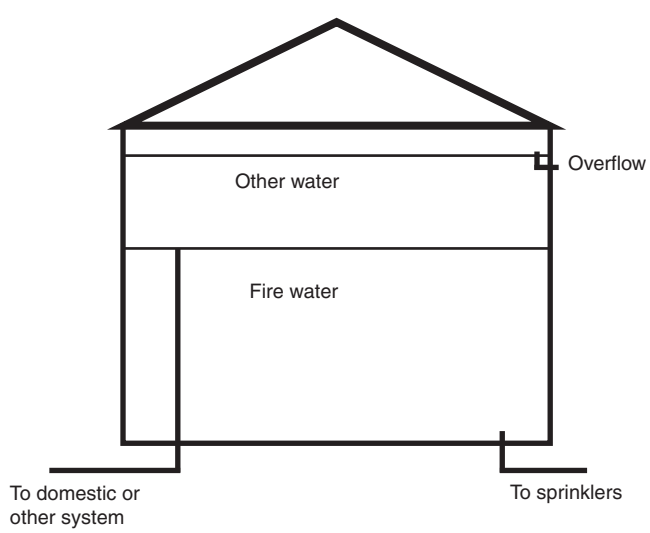

FIGURE A.14.1.7.1.1 Dual Purpose Tank.

(5) *Extension Piece.* Where the mercury catcher is not needed, it can be replaced by approximately a 3 ft (0.91 m) extension of ⅛ in. (3 mm) pipe, vented at the top.

(6) *Water-Drain Plug.* A plugged tee should be provided in the mercury pipe between the mercury pot and the gauge glass to allow water that sometimes accumulates on top of the mercury column to drain off.

(7) *Location.* The gauge should be installed in a heated room such as a boiler room, engine room, or office, where it is readily accessible for reading, testing, and maintenance. It should be so located that it is not liable to break or to be damaged.

The column of mercury, extending from the mercury pot to the top, is roughly 1/13 the height from the mercury pot to the top of the tank. This fact should be considered when planning a location for the instrument.

(8) *Cleaning.* Before installing the gauge, all grease, dirt, and moisture should be removed from the pot and piping that are to contain mercury, and it should be ensured that the mercury itself is clean. Warm water that contains a small amount of washing soda is a good cleaning agent.

(9) *Installing.* The gauge should be accurately installed so that when the tank is filled to the level of the overflow, the mercury level is opposite the FULL mark on the gauge board.

(10) *Testing.* To determine that it is accurate, the instrument should be tested occasionally as follows:

(a) Overflow the tank.

(b) Close the OS&Y valve. Open the test cock. The mercury should quickly drop into the mercury pot. If it does not, there is an obstruction that must be removed from the pipe or pot between the test cock and the gauge glass.

(c) If the mercury lowers at once, as expected, close the test cock and open the OS&Y valve. If the mercury responds immediately and comes to rest promptly opposite the FULL mark on the gauge board, the instrument is operating properly.

(d) If the mercury column does not respond promptly and read correctly during the test specified in A.14.1.8(10)(c), there are probably air pockets or possibly obstructions in the water-connecting pipe. Open the test cock. Water should flow out forcefully. Allow water to flow through the test cock until all air is expelled and rusty water from the tank riser appears. Then close the test cock. The gauge should now read correctly. If air separates from the water in the 1 in. (25 mm) pipe due to being enclosed in a buried tile conduit with steam pipes, the air can be automatically removed by installing a ¾ in. (20 mm) air trap at the high point of the piping. The air trap can usually be best installed in a tee connected by a short piece of pipe at a location between the OS&Y valve and the test cock, using a plug in the top of the tee, so that mercury can be added in the future, if necessary, without removing the trap. If there are inaccessible pockets in the piping, such as locations below grade or under concrete floors, the air can be removed only through the test cock.

(e) If, in the test specified in A.14.1.8(10)(d), the water does not flow forcefully through the test cock, there is an obstruction that must be removed from the outlet of the test cock or from the water-pipe between the test cock and the tank riser.

(f) If there is water on top of the mercury column in the gauge glass, it will cause inaccurate readings and must be removed. First lower the mercury into the pot as in the test specified in A.14.1.8(10)(b). Close the test cock and remove the plug at the base of the mercury gauge. Open the OS&Y valve very slowly, causing mercury to rise slowly and the water above it to drain through the plug at the base of the mercury gauge. Close the OS&Y valve quickly when mercury appears at the outlet at the base of the mercury gauge, but have a receptacle ready to catch any mercury that drains out. Replace the plug. Replace any escaped mercury in the pot by removing the plug between the OS&Y valve and the test cock, and with the OS&Y valve closed, fill the pot with mercury to the mark on the cover corresponding to the height above the pot that indicates the full water level in the tank. Replace the plug.

(g) After testing leave the OS&Y valve open, except as noted in A.14.1.8(11).

(11) *Excessive Water Pressures.* If necessary, to prevent forcing mercury and water into the mercury catcher, the controlling OS&Y valve can be closed when the tank is being filled. However, the valve should be left open after the tank is filled, except when the gauge is subjected to continual fluctuation of pressure, when it might be necessary to keep the gauge shut off, except when it is being read. Otherwise, it might be necessary to frequently remove water from the top of the mercury column, as in A.14.1.8(10).

A.14.1.9 The insulating qualities of frostproof casing are seriously impaired if joints spring open, if the casing settles away from the tank, or if rotting occurs around the base.

A.14.1.10.1 By heating the large steel-plate tank riser pipes, the fire hazard and upkeep of the frostproof casing and the provision of an expansion joint or walkway are avoided. However, painting and heating the larger tank riser and building the stronger and larger valve pit cost more than the equipment for smaller tank risers.

A blow-off valve is sometimes furnished near the base of the larger tank riser.

A check valve and gates in the discharge pipe, filling arrangement, overflow, and drain are generally provided.

A.14.1.11.1 The inlet can be done with an American National Standards Institute 125 lb/in. (8.6 bar) flanged tee, with the "run" of the reducing tee placed horizontally and with horizontal outlets one pipe size smaller than the discharge pipe, or with a fabricated plate extending at least 4 in. (102 mm) beyond the outside diameter of the pipe.

N **A.14.2.11.4** See 14.4.1.1.

A.14.2.13 See Figure B.1(o), Figure B.1(p), and Figure B.1(q).

A.14.2.13.2 Large, standard size anti-vortex plates [48 in. × 48 in. (1219 mm × 1219 mm)] are desirable, as they are adequate for all sizes of pump suction pipes normally used. Smaller plates may be used; however, they should comply with 14.2.13.

N **A.14.5** Break tanks have been used for one or more of the following reasons:

(1) As a backflow prevention device between the city water supply and the fire pump suction
(2) To eliminate pressure fluctuations in the city water supply and provide a steady suction pressure to the fire pump
(3) To augment the city water supply when the volume of water available from the city is inadequate for the fire protection demand
(4) To serve in situations where the building owner does not have room for a tank to meet the full demand of the fire protection system

A.14.6.3 On column-supported tanks with outside overflow, vertical extensions of the pipe that is located below the balcony are not recommended, as they can become plugged with ice.

A.14.6.4.2 See 14.1.12.

A.14.7.3.6 See Figure B.1(k).

A.14.7.4.5 See Figure B.1(i).

•

Δ **A.15.1.2** *Insulation Materials.* Installation and use of insulating materials should be as follows.

(1) *Insulation Construction.* Layers of listed insulation should be constructed as follows:

(a) Remove all rust from the pipes with wire brushes and apply two coats of red lead paint using the mixture specified in Section 5.7 or a listed paint.
(b) Wrap all pipes together with waterproof building paper applied over hardwood cleats equal in thickness to the projections of pipe flanges or couplings.
(c) Apply alternate wrappings of 1 in. (25.4 mm) insulation and waterproof building paper using the number of layers that are equivalent in insulating value to the wooden casings specified in A.15.1.2(2) and finishing with building paper.
(d) Provide an outer covering of painted 8 oz (0.227 kg) canvas that is securely bound with No. 16 (1.29 mm) copper wire with windings not over 1 ft (0.305 m) apart, or secure by sewing. This type of casing is likely to settle and expose the pipes at the top of the insulation unless it is adequately secured to the pipes and the tank bottom. Approval of the use of insulating materials should be obtained from the authority having jurisdiction. Insulating materials between inner and outer layers of wood or metal can be used after obtaining the approval of the authority having jurisdiction. Such casings should be watertight and should conform to other subsections of this section as applicable. Recommendations for insulated metal casings are shown in Figure B.1(r). Absorbent insulating materials should not be placed in direct contact with iron or steel pipes. In the case of low towers, brick casings with 1 in. (25.4 mm) air spaces between four 4 in. (102 mm) walls and bonded together with frequent headers supported on concrete foundations have proven satisfactory in very cold climates.

Closed cellular insulation (foam glass, polystyrene, or polyurethane) or fiberglass insulation in the thicknesses listed in A.15.1.2(2) are acceptable. Foam glass and fiberglass should have a heavy, vapor-repellent paper wrapper (or other suitable material) enclosing each section. Where any of these materials are weather exposed, the insulation should be jacketed with weather-resistant material.

Other insulating materials can be used with the approval of the authority having jurisdiction.

(2) *Insulation Classification and Limitation.* Recommendations for insulation and classification limitations are as follows:

(a) Wooden frostproof casings and insulated metal frostproof casings *[see Figure B.1(r)]* are intended for weather-exposed pipes. Each of these casings can protect multiple piping systems. The first paragraph of A.15.1.2 regulates the wrapping of insulation around multiple weather-exposed pipes. Single weather-exposed pipes may be protected by jacketed (weather-resistant), closed cellular, or fiberglass insulations.
(b) Closed cellular or fiberglass material without weather guards is suitable for insulating individual pipes in unheated buildings, dry tank risers of elevated tanks, or other weather-protected areas.
(c) Table 15.1.2.4 specifies the minimum thickness of various materials or types of construction.

(3) *Wood Preservatives.* The lumber used in wooden frostproof casings is subject to rotting. Treatment of the lumber with a suitable preservative, such as sodium fluoride, creosote, or even zinc chloride, is recommended.

A.15.1.3 A valve house that contains only the OS&Y gate in the discharge pipe and the heater can usually be made smaller.

A.15.1.3.2 Ordinarily, a pit 7 ft × 6 ft × 9 ft (2.1 m × 1.8 m × 2.7 m) is of sufficient size.

A.15.1.8 Where suitable drainage cannot be achieved, an injector is sometimes advisable.

•

A.16.1.2 *Determination of Heater Capacity — General.* To prevent freezing in any part of the tank equipment during the coldest weather that can occur, the heating system should replace the heat lost from the tank and piping when the temperature of the coldest water is safely above the freezing point and the mean atmospheric temperature for one day is at its lowest for the locality being considered.

•

A.16.1.2.2 The low water temperature alarm should be connected to the local proprietary alarm system or to a listed central station supervisory service.

•

Shaded text = Revisions. Δ = Text deletions and figure/table revisions. • = Section deletions. *N* = New material.

Δ **A.16.1.4** *Heat Losses.* The calculation method provides heat losses from uninsulated gravity steel tanks, elevated wood tanks, steel suction tanks, embankment-supported coated fabric suction tanks, insulated steel gravity tanks, and insulated steel suction tanks. The losses are indicated in the British thermal units per hour (kilowatts) that are lost from the entire tank equipment when the temperature of the coldest water is safely above the freezing point and represent the British thermal units per hour that the heating system should supply when the atmospheric temperature is within the range provided by the calculation method. See Figure A.16.1.4 for an example calculation for selecting an immersion heater.

A.16.1.5 Heater pipes should be replaced as conditions warrant. Historically, the life cycle is 10 years. It is generally more economical to replace pipes during routine maintenance.

A.16.1.7 Typical installation arrangements for heater water-circulating pipes are shown in Figure B.1(s) through Figure B.1(v), Figure 16.3.7.10.3, and Figure 16.3.7.11.1.

A.16.1.9.1 A recording thermometer with the sensitive bulb inserted in the coldest water is a valuable accessory that provides a constant record of water temperatures and ensures more careful supervision by the management.

Δ **A.16.2** The heating instrument should be in accordance with the local jurisdictional regulatory agencies under the specification of the designing engineer, the immersion heating element manufacturer, and as per the tank manufacturers' recommendation.

Recommendations for Gravity Circulation Heating. Gravity circulation allows convenient observation of the coldest water temperatures at a thermometer in the cold-water return pipe and is dependable and economical when correctly planned. Cold water received through a connection from the discharge pipe or from near the bottom of a suction tank is heated and rises through a separate hot-water pipe into the tank.

Water has its maximum density at 39.2°F (4°C). When the temperature of the water falls below 39.2°F (4°C), a water inversion occurs and the warmer water settles to the bottom of the tank while the colder water rises. Therefore, if the circulation heater is to be fully effective, sufficient heat should be provided so that the temperature of the coldest water is maintained above 42°F (5.6°C) to prevent inversion. *(See Table A.16.2.)*

Δ **A.16.2.1** A water circulating pump can be used in a bypass line to improve the efficiency of the gravity circulation heating system. However, the heater size should be based on gravity circulation to provide heat loss as determined by the heat loss calculations. The water circulating pump should be controlled by an outside thermostat that is designed to start the pump when the outside temperature drops to 40°F (4.4°C).

Δ **A.16.3.1** *Steam Coils and Radiators.* An adequate area of heating surface in steam coils and pipe radiators can also be determined with reasonable accuracy by dividing the heat loss determined, as specified in A.16.1.4, by the heat transfer in British thermal units per hour per square foot for the steam pressure available. The result is the number of square feet of heating surface in standard pipe sizes of various lengths and allows a convenient means of determining the required length of a coil or pipe radiator. Steam pressures of less than 10 lb/in.^{2} (0.7 bar) should never be used for coils or pipe radiators unless special provision, such as an auxiliary trap or drip in the steam-supply pipe, is made to drain out the condensate at the low point of the steam-supply branch line to the heater. The average efficiencies of heaters and the heat content of fuels are specified in Table A.16.3.1.

Heaters designed so that water passes through the tubes or coils surrounded by steam are practical for ease of cleaning.

Δ **A.16.3.7.1** A vertical steam radiator, as shown in Figure B.1(u), but without the open-ended pipe sleeve around the radiator heater, is reasonably well adapted to heating gravity tanks with larger tank risers for tower heights under 100 ft (30.5 m) *(see 13.1.2)*, suction tanks.

A.17.1.2 See Figure A.17.1.2.

A.17.4 Care should be taken when retorquing bolts in leaking areas. Overtorqued bolts can cause linings to crack, to splinter, or to be otherwise damaged. Manufacturers' recommendations for the repair or replacement of panels should be followed.

Example

2 in. insulated FPR panel-type tank

Capacity = 31,000 U.S. gal

5 m × 5 m × 5 m rooftop

Step 1.

Solve for the square area of the tank.

Square or rectangular tank:

$l \times h \times 2 = 5\text{ m} \times 5\text{ m} \times 2 = 50\text{ m}^2$

$w \times h \times 2 = 5\text{ m} \times 5\text{ m} \times 2 = 50\text{ m}^2$

$l \times w \times 2 = 5\text{ m} \times 5\text{ m} \times 2 = 50\text{ m}^2$

Total square area = 50 m² + 50 m² + 50 m² = 150 m² (1614.59 ft²)

Step 2.

Calculate the difference between the desired tank water temperature and outside ambient (NYC worst case −4°F):

40°F − (−4°F) = 44°F

Step 3.

Determine the R-value of tank material:

FPR panel 2 in. insulated tank = 12.26

Step 4.

Solve for the Btu/hr loss:

Square area × heat difference/R-value of the tank material

1614.59 ft² × 44°F/12.26 = 5794.61 Btu/hr

Step 5.

Add 5% to the total of Step 4. When tanks are exposed to winds above 20 mph, add an additional 5% for every 5 mph above 20 mph to a maximum of 15%.

5794.61 Btu/hr × 1.15 (15% for maximum wind exposure) = 6663.80 Btu/hr

Step 6.

Convert Btu/hr to the appropriate units for the type of heating being used and include a safety factor of 10%:

Btu/hr loss × heater unit conversion × 1.1

(1 Btu/hr = 0.00029307107 kW)

6663.80 Btu/hr × 0.00029307107 × 1.1 = 2.15 kW

Therefore, an immersion heater would need to provide 2.15 kW in order to maintain the tank water temperature at 40°F.

N **FIGURE A.16.1.4 Example Calculation for Selecting an Immersion Heater.**

Table A.16.2 Square Feet of Heating Surface in Coils or Pipe Radiators of Various Lengths

Length (ft)	Pipe Size (in.)										
	¾	1	1¼	1½	2	2½	3	3½	4	5	6
1	0.275	0.346	0.434	0.494	0.622	0.753	0.916	1.048	1.175	1.455	1.739
10	2.7	3.5	4.3	4.9	6.2	7.5	9.2	10.5	11.8	14.6	17.4
15	4.1	5.2	6.5	7.4	9.3	11.3	13.7	15.7	17.6	21.8	26.1
20	5.5	6.9	8.7	9.9	12.5	15.0	18.3	21.0	23.5	29.1	34.8
25	6.9	8.6	10.9	12.3	15.6	18.8	22.9	26.2	29.3	36.3	43.5
30	8.3	10.4	13.0	14.8	18.7	22.5	27.5	31.4	35.3	43.6	52.1
35	9.6	12.1	15.2	17.3	21.8	26.3	32.0	36.7	41.1	50.9	60.8
40	11.0	13.8	17.4	19.8	24.9	30.1	36.6	41.9	47.0	58.2	69.5
45	12.4	15.6	19.5	22.2	28.0	33.8	41.2	47.2	52.9	65.5	78.2
50	13.8	17.3	21.7	24.7	31.1	37.6	45.8	52.4	58.7	72.7	87.0
55	15.1	19.1	23.8	27.2	34.2	41.4	50.4	57.6	64.6	80.0	95.7
60	16.5	20.8	26.0	29.6	37.3	45.2	55.0	62.8	70.5	87.3	104.3
65	17.9	22.5	28.2	32.1	40.4	49.0	59.5	68.1	76.4	94.6	
70	19.2	24.2	30.4	34.6	43.5	52.7	64.1	73.3	82.3	101.9	
75	20.6	26.0	32.6	37.1	46.6	56.5	68.7	78.5	88.2		
80	22.0	27.7	34.7	39.5	49.8	60.2	73.2	83.8	93.0		
85	23.4	29.4	36.8	42.0	52.9	63.0	77.8		99.9		
90	24.7	31.2	39.0	44.5	56.0	67.8	82.4		105.8		
95	26.1	32.9	41.2	46.9	59.1	71.5	87.0				
100	27.5	34.6	43.4	49.4	62.2	75.3	91.6				

Note: For SI units, 1 in. = 25.4 mm; 1 ft = 0.3048 m; 1 ft^2 = 0.0929 m^2.

Table A.16.3.1 Average Efficiencies of Heaters and Heat Content of Fuels

Type of Heater	Average Efficiency (%)	Fuel	Average Heat Content	
			Btu	MJ
Steam heaters, coils, etc.	95	Anthracite coal (per lb)	13,300	30.9
Electric heaters	95	Bituminous coal, high grade (per lb)	13,200	30.7
Boilers (fuel oil)	70	Bituminous coal, medium grade (per lb)	12,000	27.9
Boilers (coal)	70	Bituminous coal, low grade (per lb)	10,300	23.9
Gas water heaters	70	Fuel oil (per lb)	19,000	44.2
		Gas, natural [per ft^3 (m^3)]	1,100	41.0
		Gas, artificial [per ft^3 (m^3)]	600	22.4
Coal-burning water heaters	40 to 60	Electricity (per kWh)	3,415	3.6

Note: For SI units, 1 lb = 0.454 kg; 1 ft^3 = 0.0283 m^3.

WATER STORAGE TANKS FOR FIRE PROTECTION INSPECTION CHECKLIST

Date of inspection: _____ Capacity: _____

Inspector name: _____ Diameter: _____

Inspector phone #: _____ Height: _____

Property name: _____ Year built: _____

Property address: _____

Inspections		Comments
Joint inspection of completed equipment by a representative of the tank contractor and a representative of the owner.	❑ Yes ❑ No	
Anti-vortex plate: size and dimensions correct	❑ Yes ❑ No	

Tests		Comments
Welded Steel Tanks:		
Has flat bottom?	❑ Yes ❑ No	
Has no leaks in the shell, bottom, or roof	❑ Yes ❑ No	
Bolted Steel Tanks:		
Has no leaks	❑ Yes ❑ No	
Pressure Tanks:		
Follows ASME *Boiler and Pressure Vessel Code*?	❑ Yes ❑ No	
Hydrostatic test pressure at least 150 psi?	❑ Yes ❑ No	
Pressure does not drop more than 0.5 psi in 24 hours after being filled at working pressure and ⅔ its capacity?	❑ Yes ❑ No	
Embankment-Supported Coated Fabric Tanks:		
Has no leaks prior to shipment or after installation?	❑ Yes ❑ No	
Concrete Tanks:		
Fill tank, let it sit for 24 hours and measure liquid volume loss over next 72 hours. Has measurable leakage?	❑ Yes ❑ No	
Wood Tanks:		
Check liquid tightness for 48 hours with the help of qualified wood tank specialist?	❑ Yes ❑ No	
In accordance with National Wood Tank Institute Bulletin S82?	❑ Yes ❑ No	
Fiberglass-Reinforced Plastic Tanks:		
Hydrostatic test performed?	❑ Yes ❑ No	
All Tanks:		
Disposal of test water?	❑ Yes ❑ No	

© 2017 National Fire Protection Association NFPA 22

Δ **FIGURE A.17.1.2 Water Storage Tank Inspection Checklist.**

Annex B Typical Installations

This annex is not a part of the requirements of this NFPA document but is included for informational purposes only.

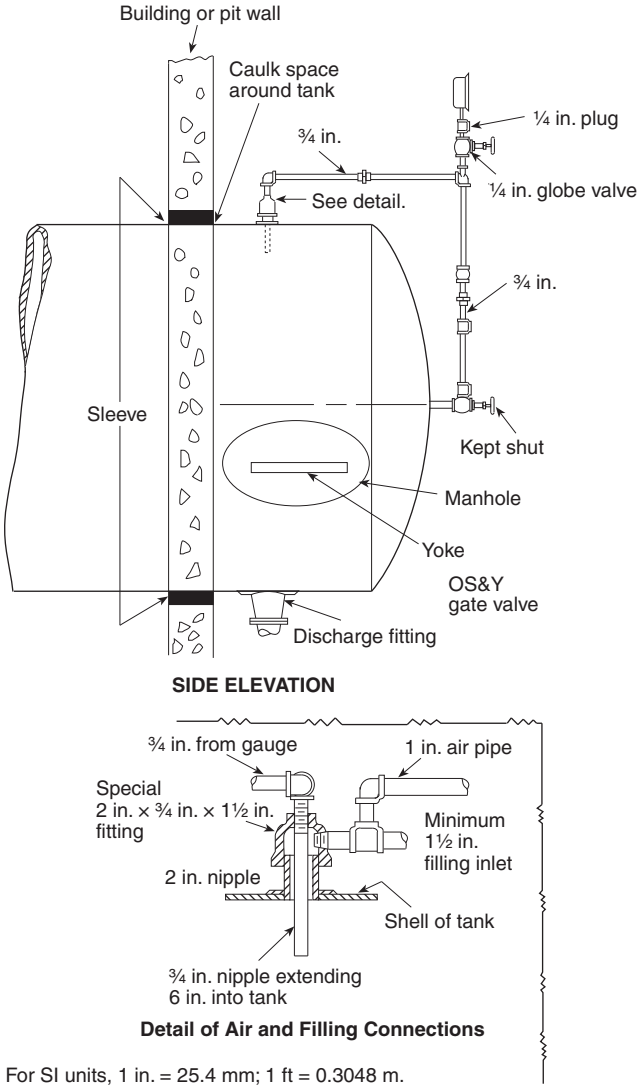

For SI units, 1 in. = 25.4 mm; 1 ft = 0.3048 m.

FIGURE B.1(a) Pipe Connections to Pressure Tanks.

Δ **B.1 General.** Figure B.1(a) through Figure B.1(z) are included in this annex for illustrative purposes only. They are intended to represent relative locations of components and connections and general details of water tank construction.

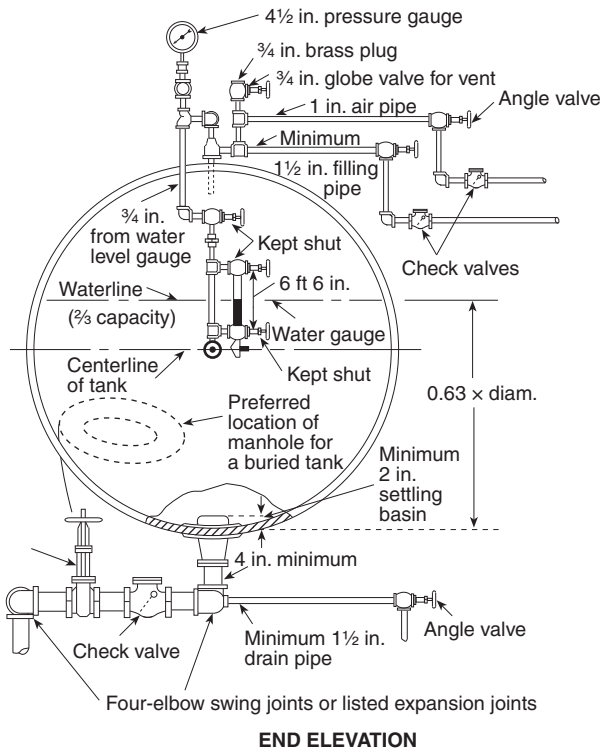

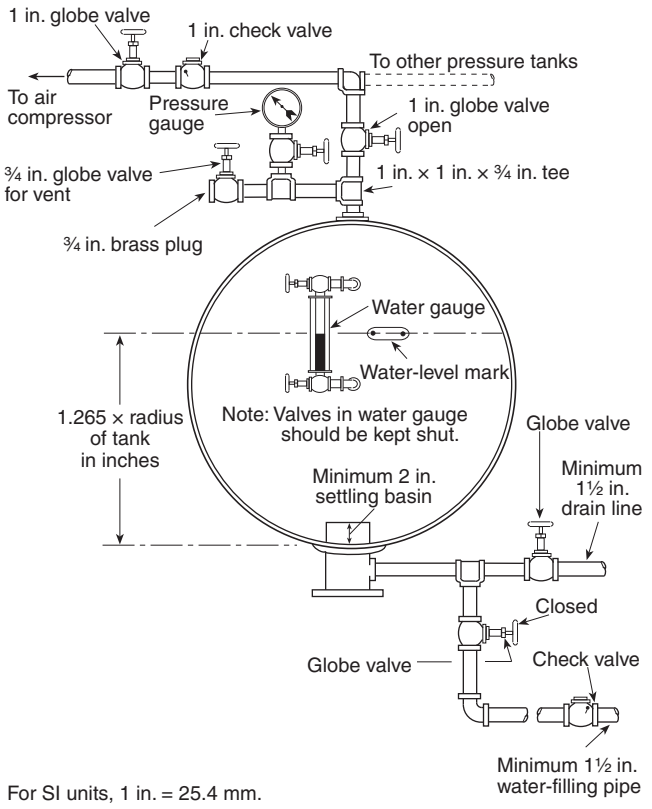

For SI units, 1 in. = 25.4 mm.

FIGURE B.1(b) Alternate Connections for Pressure Tanks.

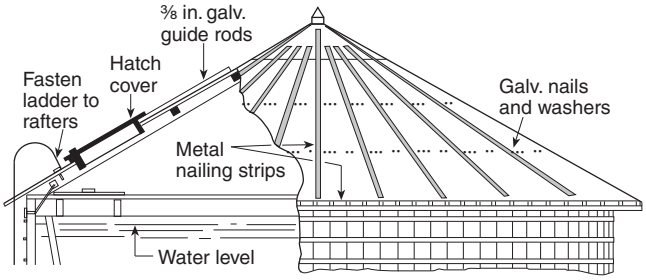

For SI units, 1 in. = 25.4 mm.

FIGURE B.1(d) Section of Conical Roof.

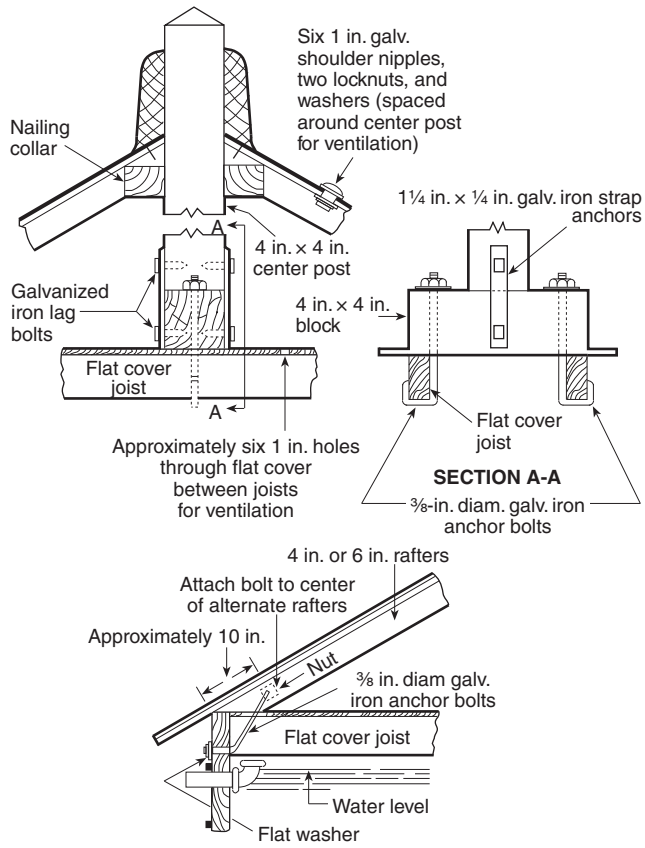

For SI units, 1 in. = 25.4 mm.

FIGURE B.1(c) Details of Tank Roof Construction.

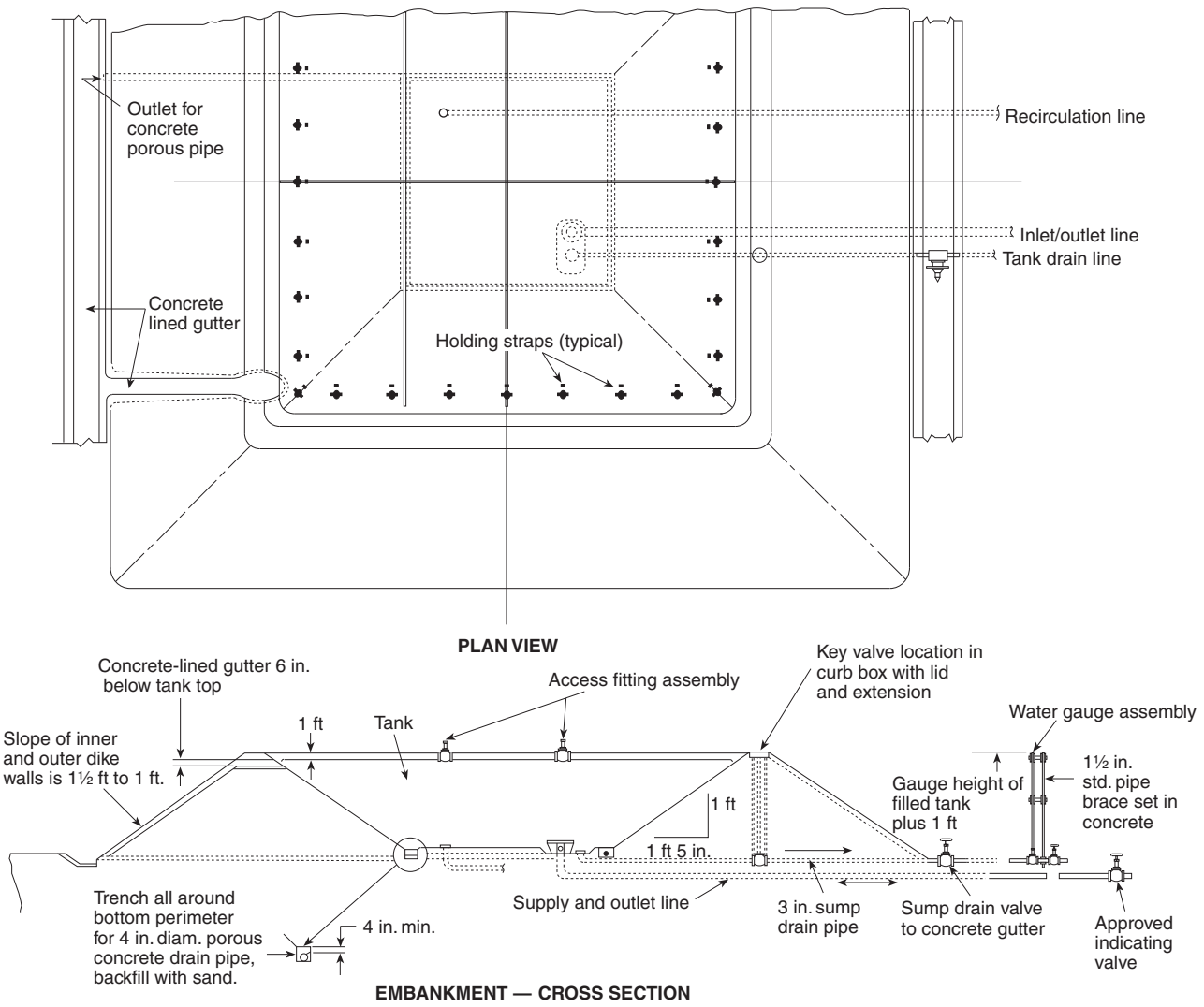

For SI units, 1 in. = 25.4 mm; 1 ft = 0.3048 m.

FIGURE B.1(e) Typical Installation Details of an Embankment-Supported Coated Fabric Suction Tank, Including Fittings.

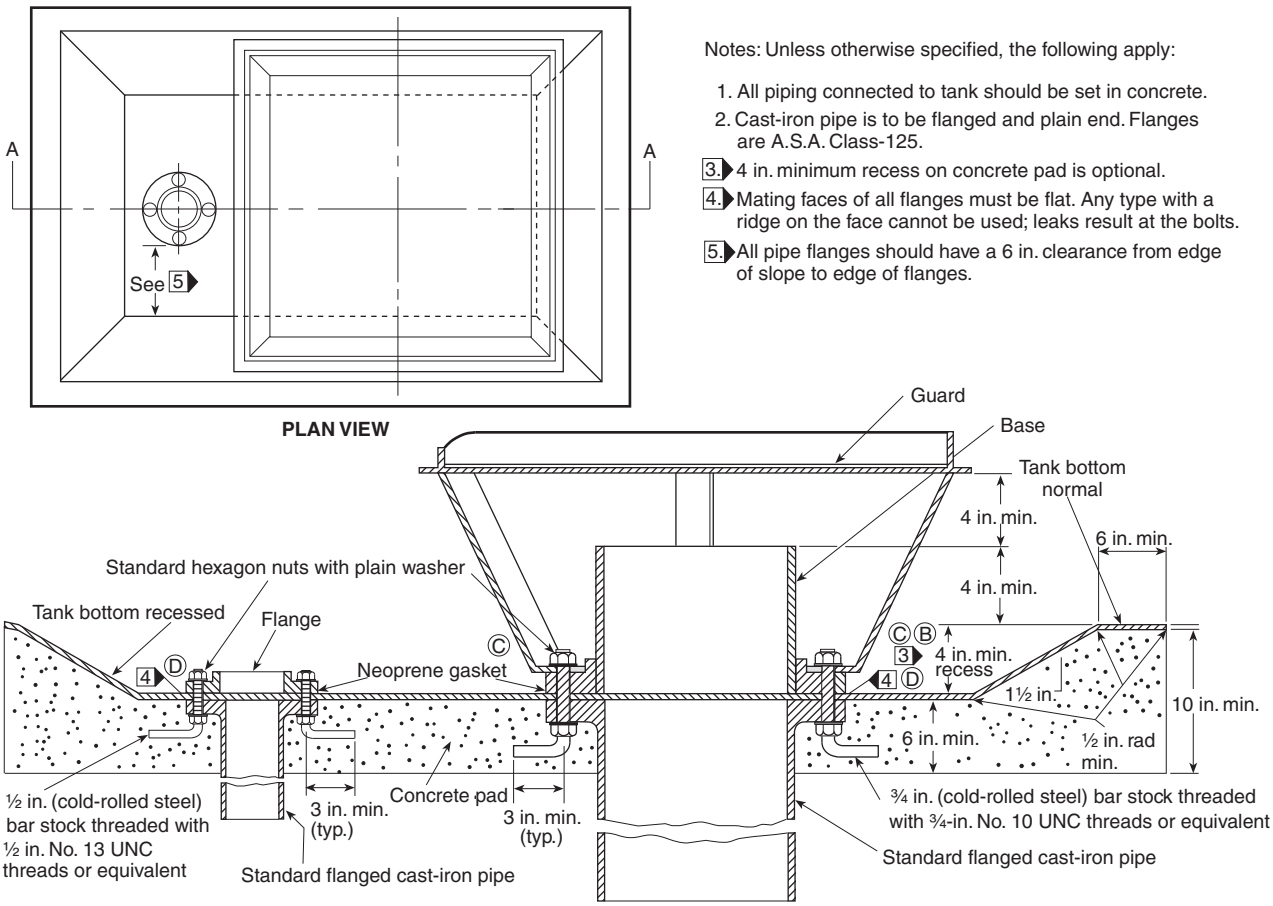

Notes: Unless otherwise specified, the following apply:

1. All piping connected to tank should be set in concrete.
2. Cast-iron pipe is to be flanged and plain end. Flanges are A.S.A. Class-125.
3. ▶ 4 in. minimum recess on concrete pad is optional.
4. ▶ Mating faces of all flanges must be flat. Any type with a ridge on the face cannot be used; leaks result at the bolts.
5. ▶ All pipe flanges should have a 6 in. clearance from edge of slope to edge of flanges.

For SI units, 1 in. = 25.4 mm; 1 ft = 0.3048 m.

Δ **FIGURE B.1(f) Inlet-Outlet Fitting Assembly, Vortex Plate Assembly, and Sump Drain Fitting for Embankment-Supported Coated Fabric Suction Tank.**

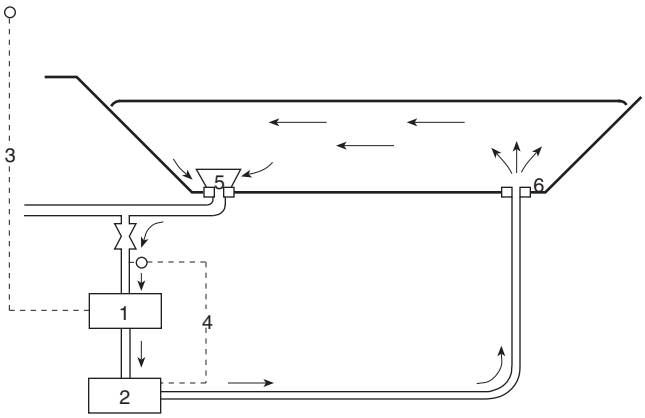

1. Recirculation pump
2. Heat exchanger
3. Unit sensing atmosphere temperature starts pump and water recirculation, enabling heat stored in ground to transfer into water at higher rate
4. Unit sensing water temperature starts heat exchanger when required
5. Inlet/outlet fitting
6. Recirculation fitting

FIGURE B.1(g) Embankment-Supported Coated Fabric Suction Tank Recirculation and Heating Schematic.

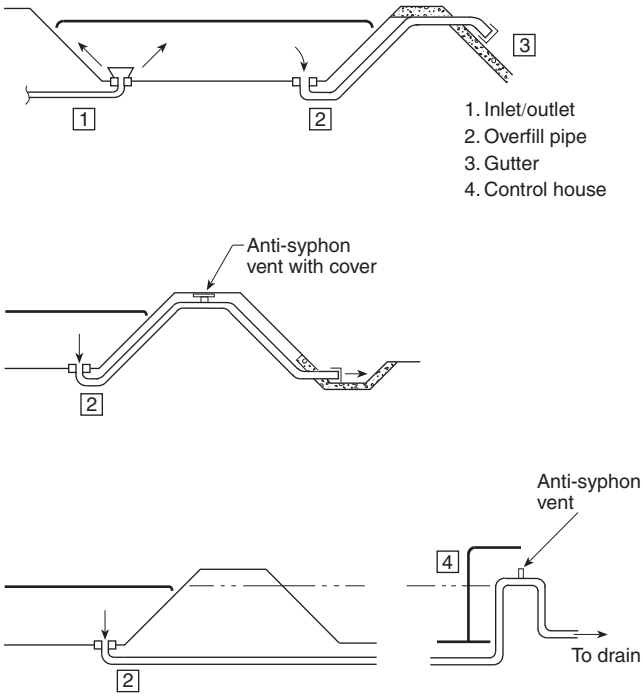

Δ **FIGURE B.1(h) Embankment-Supported Coated Fabric Suction Tank Overfill Alternates — Protected from Freezing.**

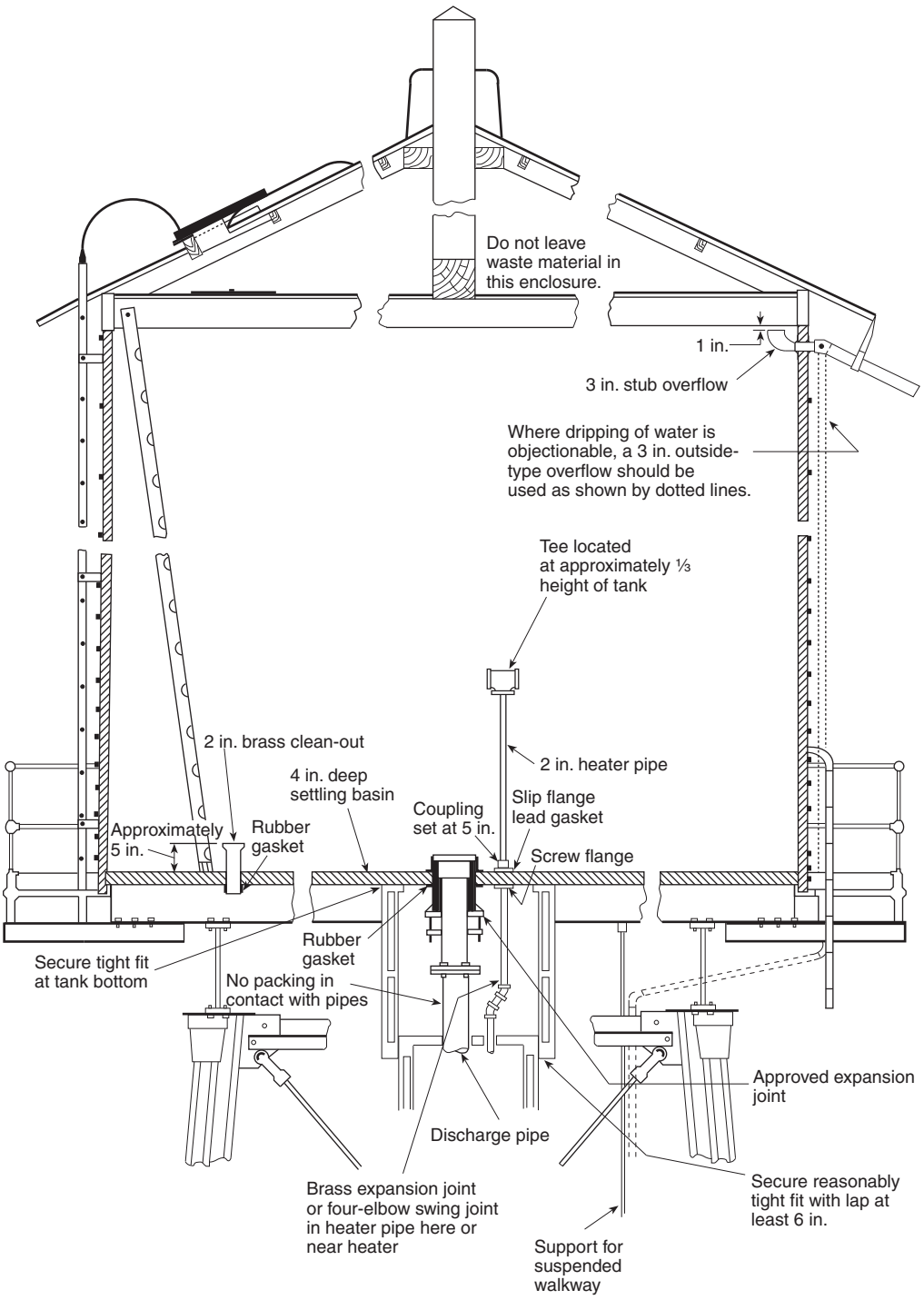

For SI units, 1 in. = 25.4 mm.

FIGURE B.1(i) Typical Tower-Supported Wood Tank.

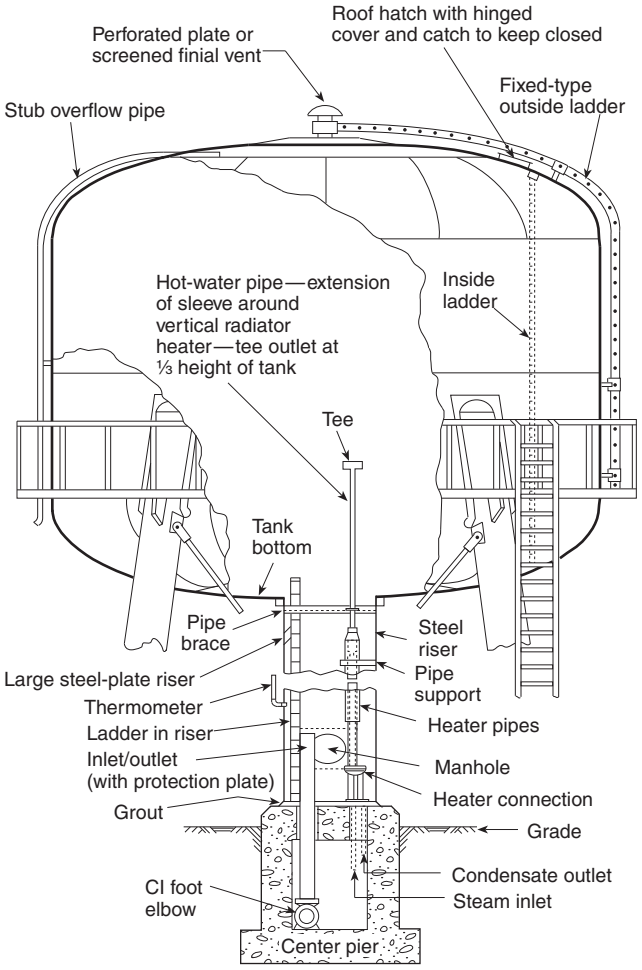

FIGURE B.1(j) Typical Tower-Supported Double-Ellipsoidal Tank.

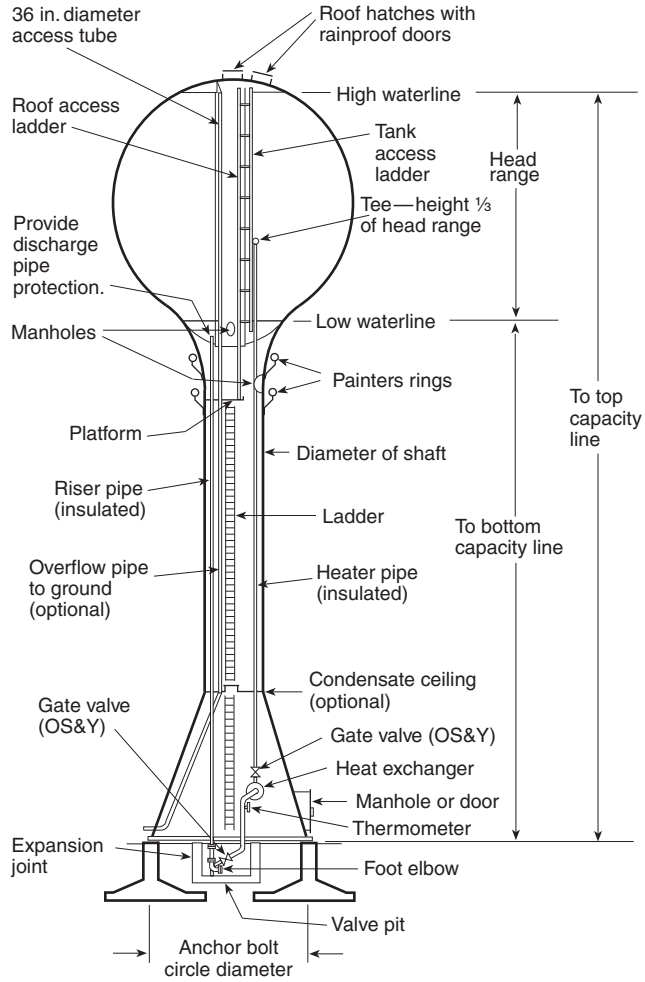

For SI units, 1 in. = 25.4 mm.

Δ **FIGURE B.1(k) Typical Pedestal Tank.**

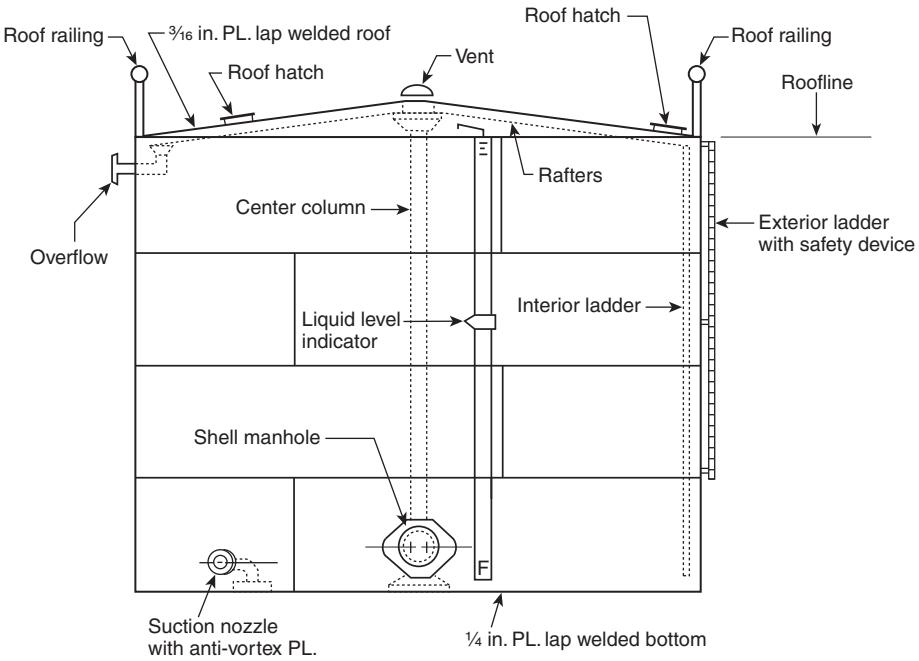

ELEVATION

For SI units, 1 in. = 25.4 mm.

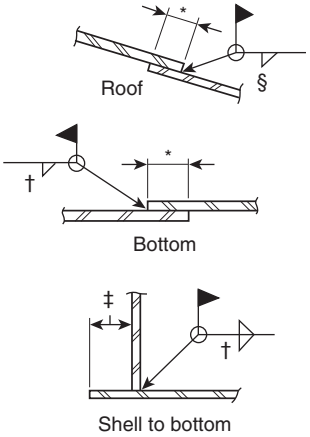

WELDING DETAIL

* 1 in. minimum, or larger as required by AWWA D100.
§ 3/16 in. minimum, or larger as required by AWWA D100.
† 1/4 in. minimum, or larger as required by AWWA D100.
‡ 1 in. minimum, or larger as required by AWWA D100.

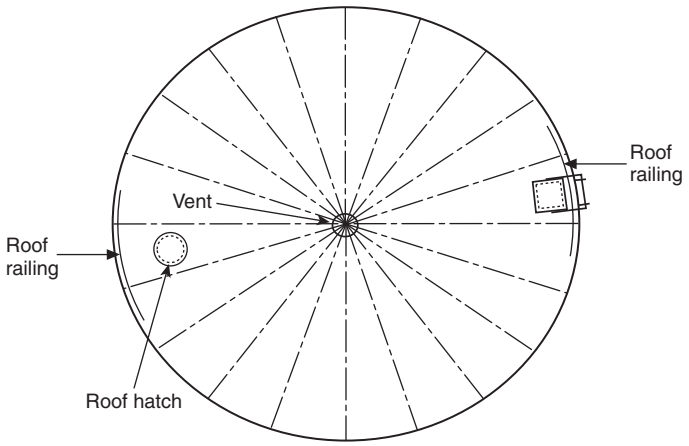

PLAN

For SI units, 1 in. = 25.4 mm.

Δ **FIGURE B.1(l) Welded-Steel Suction Tank.** ***(For more information, see Section 14.6 Overflow and Section 4.15 Roof Vent.)***

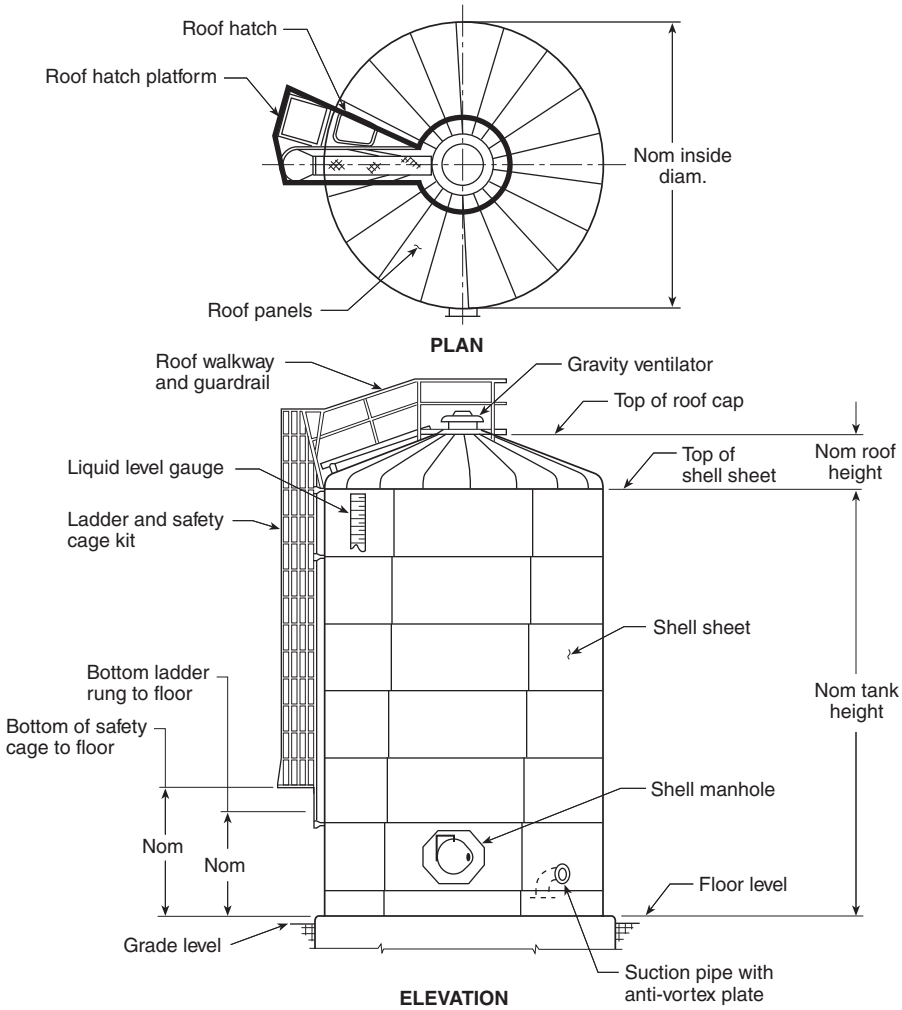

Δ **FIGURE B.1(m) Lap-Jointed Bolted Steel Tank.**

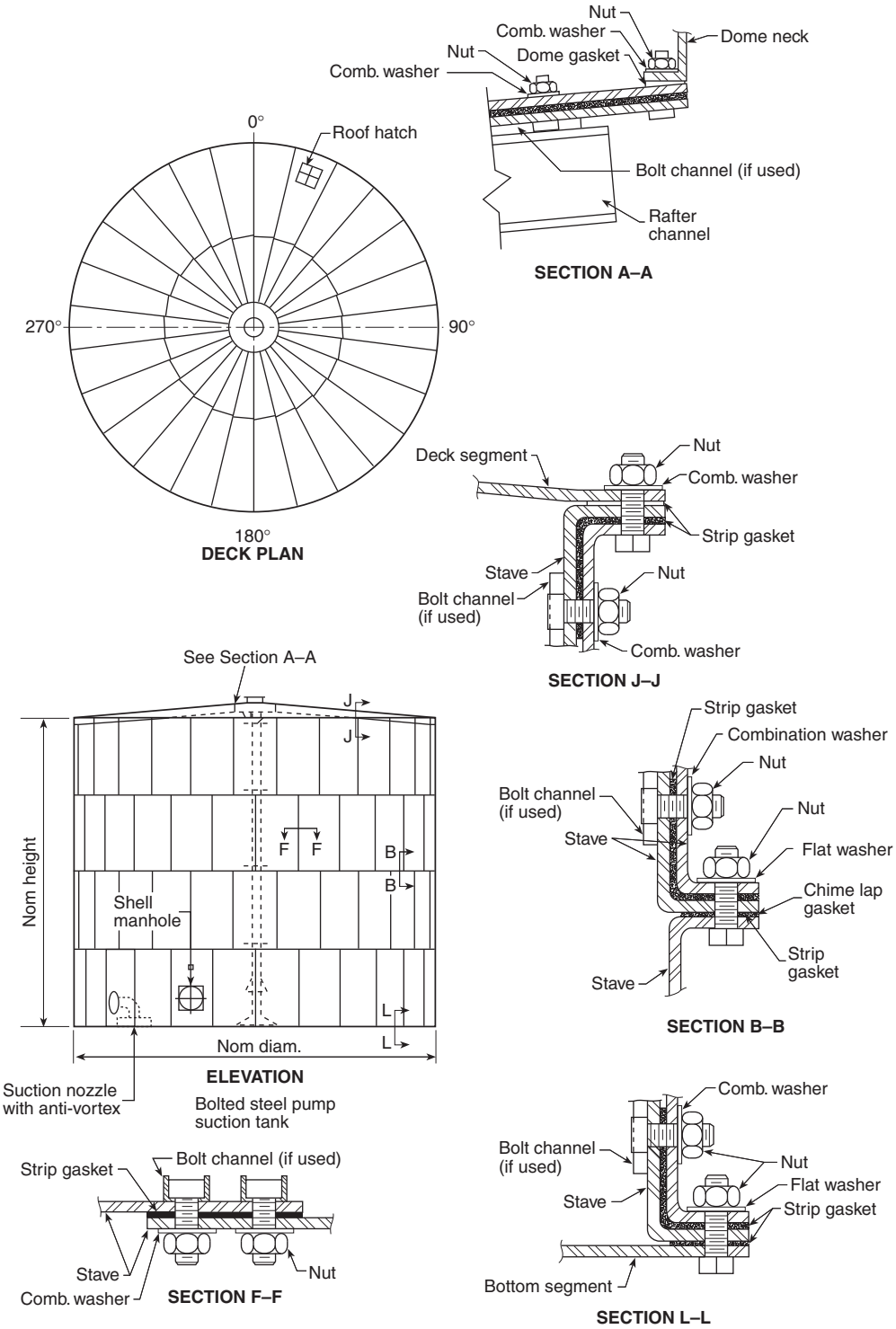

Δ FIGURE B.1(n) Flange-Jointed Bolted Steel Tank.

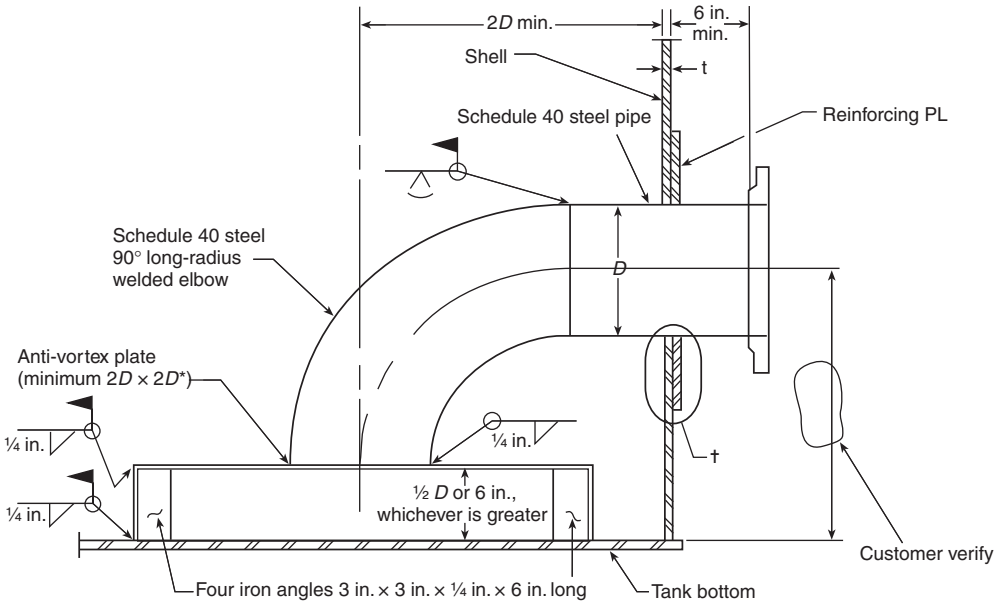

For SI units, 1 in. = 25.4 mm.
*Frequently, a 48 in. × 48 in. size is used as a standard size that will work for any situation.
†For weld size and configuration and reinforcement requirements, see AWWA D100.

Δ FIGURE B.1(o) Suction Nozzle with Anti-Vortex Plate for Welded Suction Tanks. ***(See A.14.2.13.2.)***

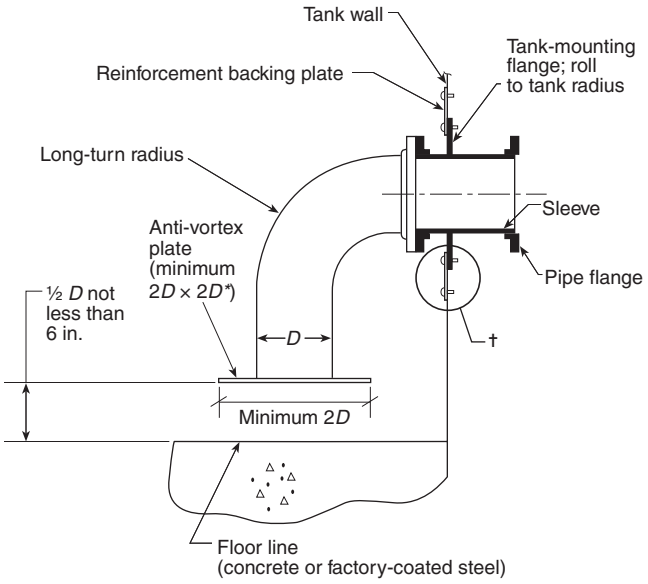

For SI units, 1 in. = 25.4 mm.
*Frequently, a 48 in. × 48 in. size is used as a standard size that will work for any situation.
†For reinforcement requirements, see AWWA D103.

Δ FIGURE B.1(p) Typical Suction Nozzle with Anti-Vortex Plate for Lap-Jointed Bolted Tanks. ***(See A.14.2.13.2.)***

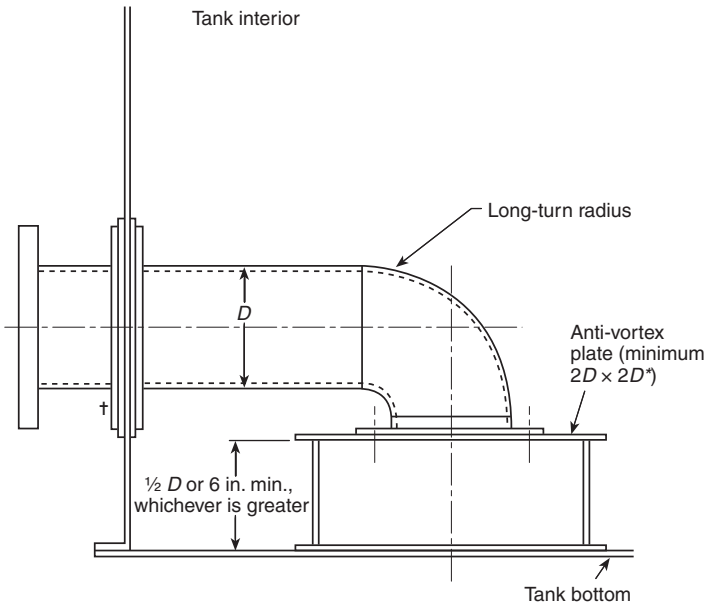

For SI units, 1 in. = 25.4 mm.
*Frequently, a 48 in. × 48 in. size is used as a standard size that will work for any situation.
†For reinforcement requirements, see AWWA D103.

Δ **FIGURE B.1(q) Typical Suction Nozzle with Anti-Vortex Plate for Flange-Jointed Bolted Steel Tanks.** ***(See A.14.2.13.2.)***

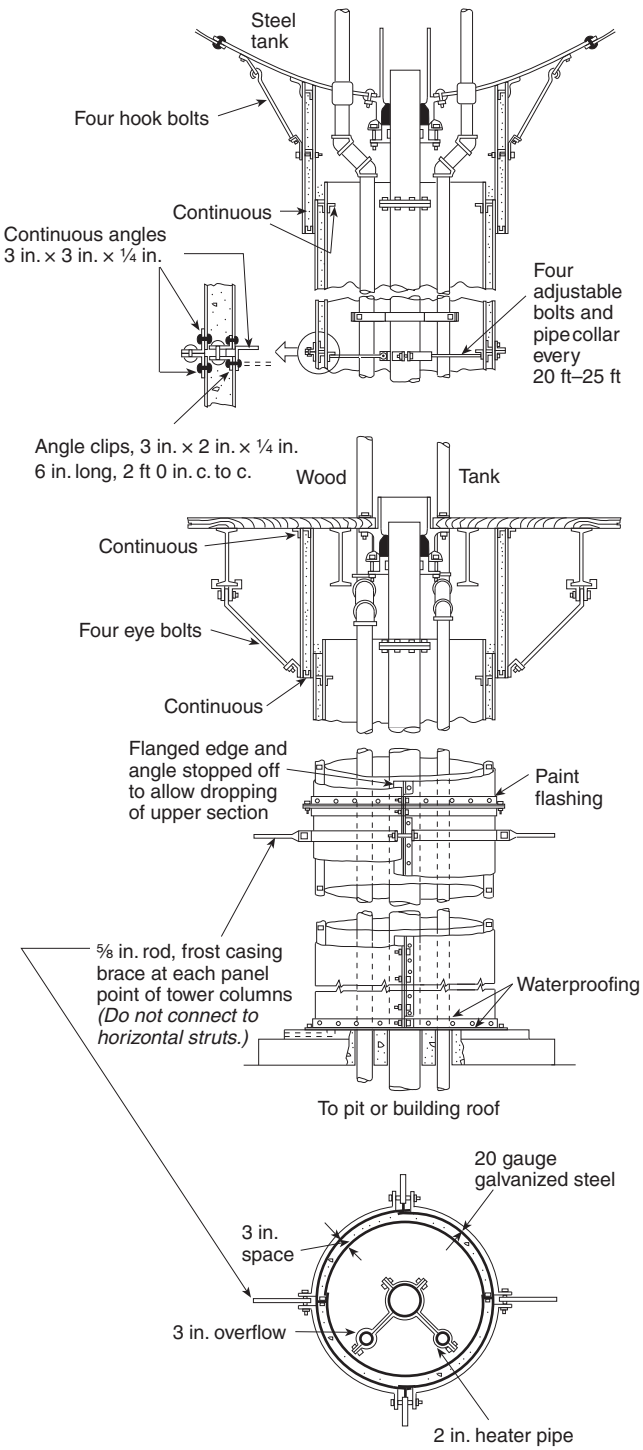

For SI units, 1 in. = 25.4 mm; 1 ft = 0.3048 m.

FIGURE B.1(r) Recommended Insulated Metal Frostproof Casings. ***(For details on waterproofing, see 14.1.1.1 and 14.1.1.2.)***

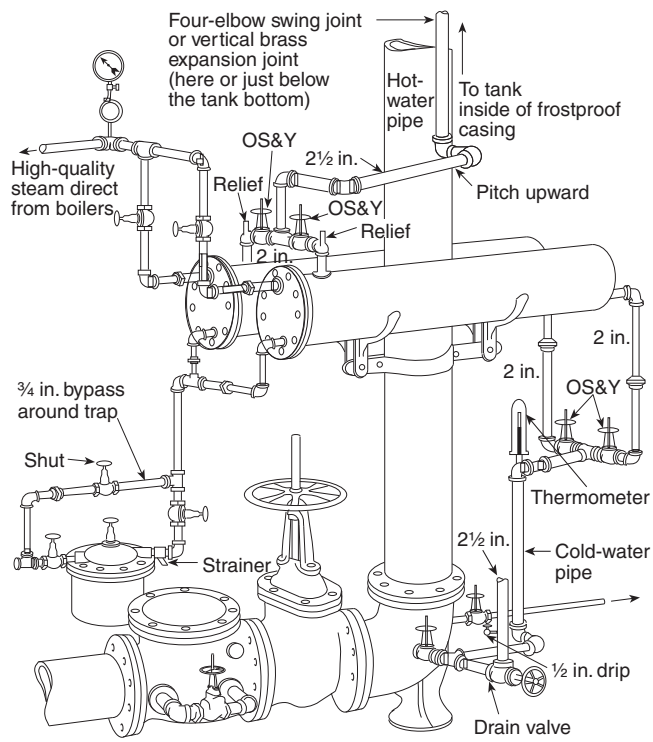

For SI units, 1 in. = 25.4 mm.

FIGURE B.1(s) Arrangements of Multiple Heaters.

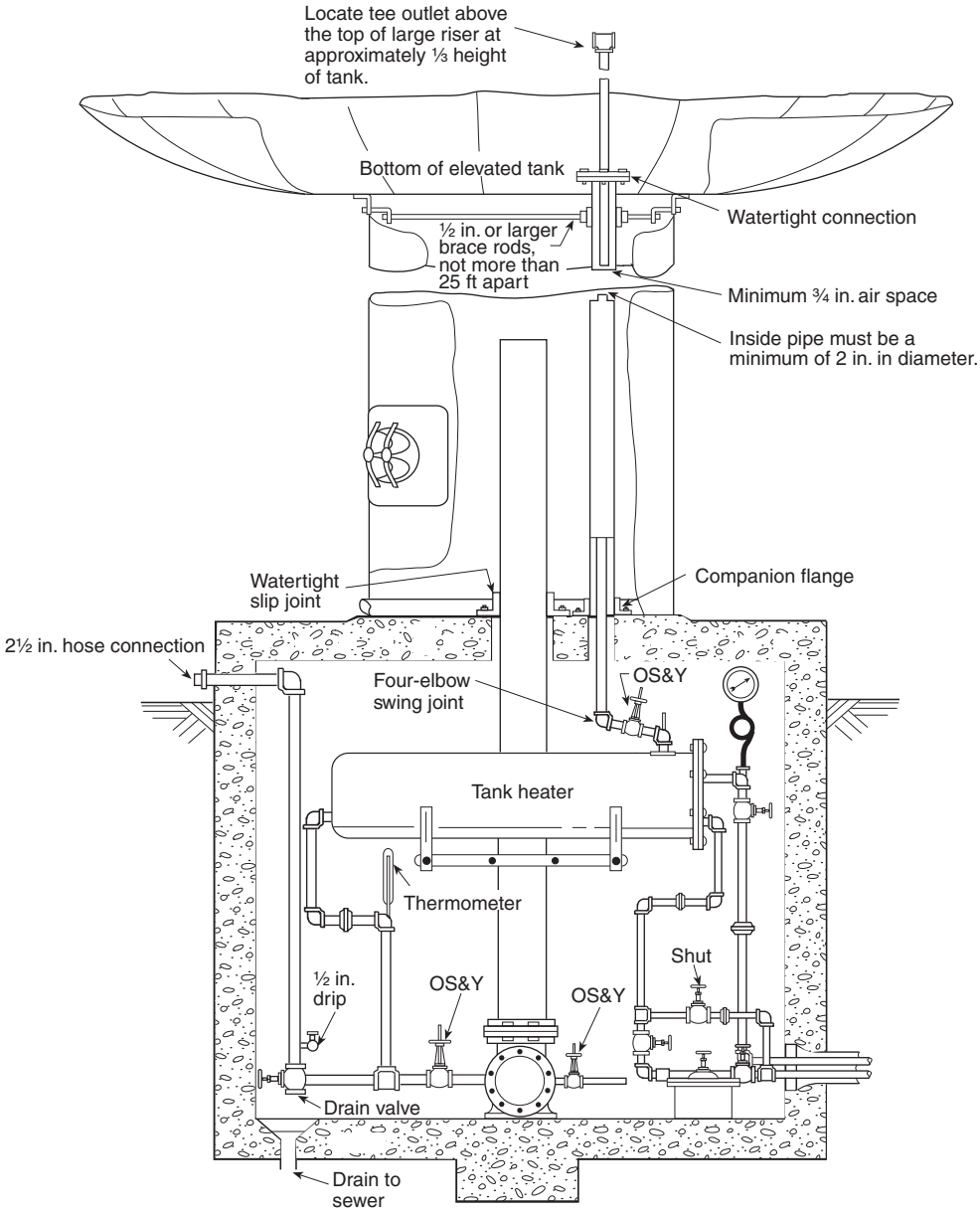

For SI units, 1 in. = 25.4 mm; 1 ft = 0.3048 m.

FIGURE B.1(t) Arrangements of a Circulation Heater for a Tank with a Large Tank Riser.

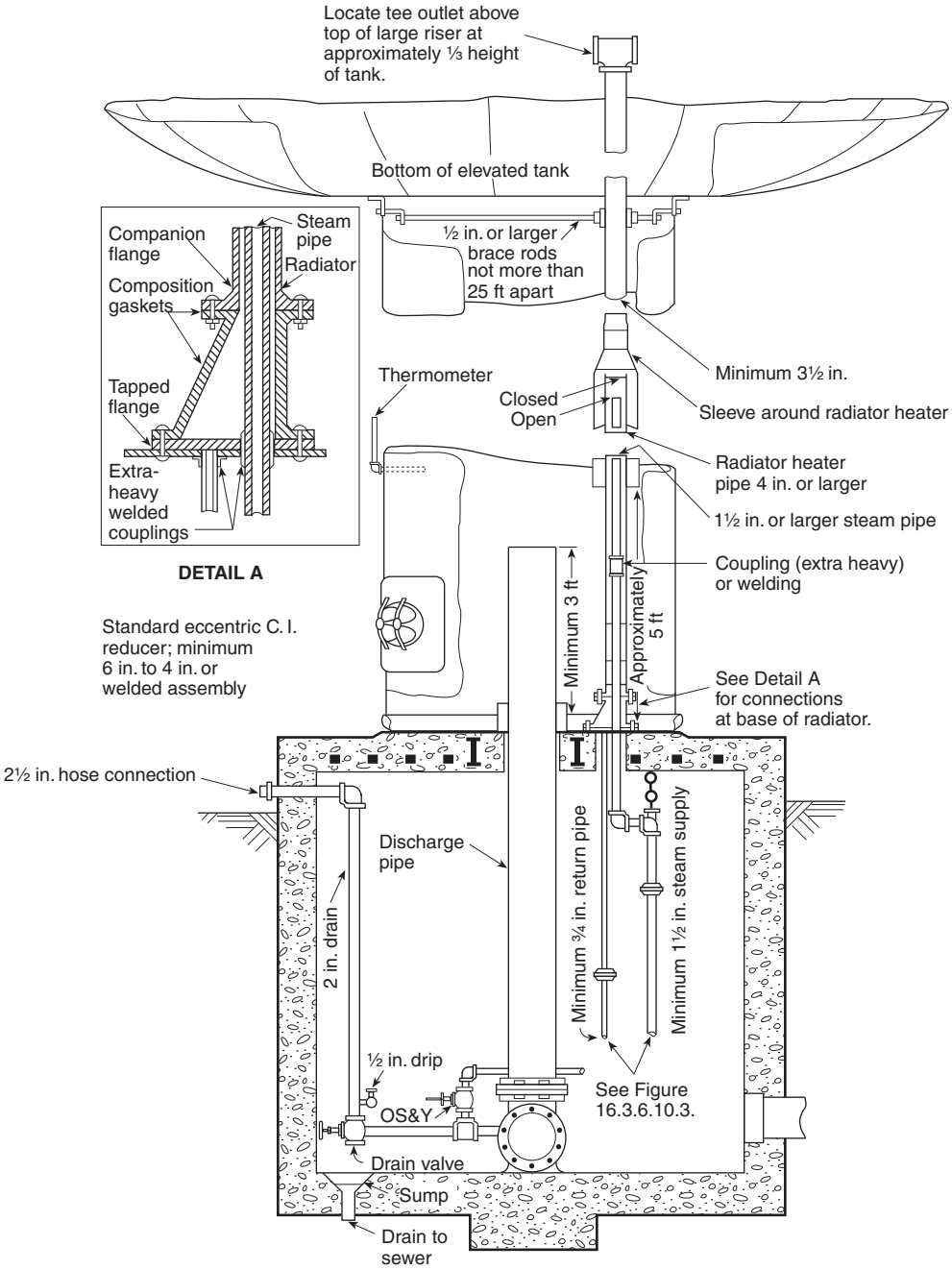

For SI units, 1 in. = 25.4 mm; 1 ft = 0.3048 m.

FIGURE B.1(u) Arrangement of a Radiator Heater for a Tank with a Large Tank Riser.

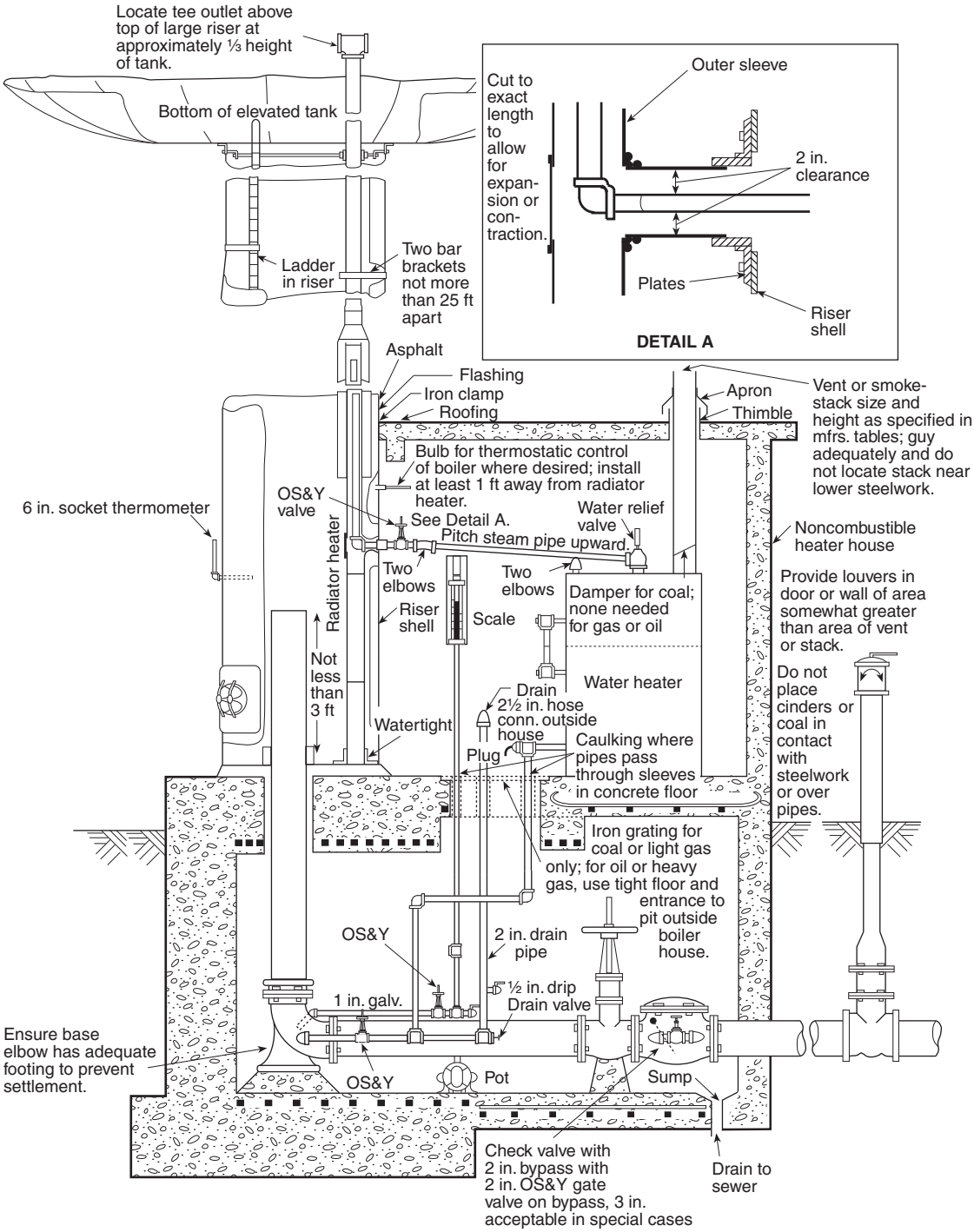

For SI units, 1 in. = 25.4 mm; 1 ft = 0.3048 m.

FIGURE B.1(v) Arrangement of Aboveground Water Heater for Tank with Large Tank Riser.

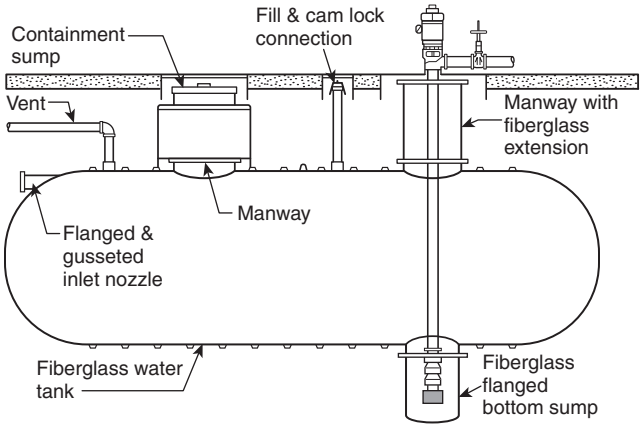

FIGURE B.1(w) Typical Fiberglass Underground Water Tank with Bottom Sump.

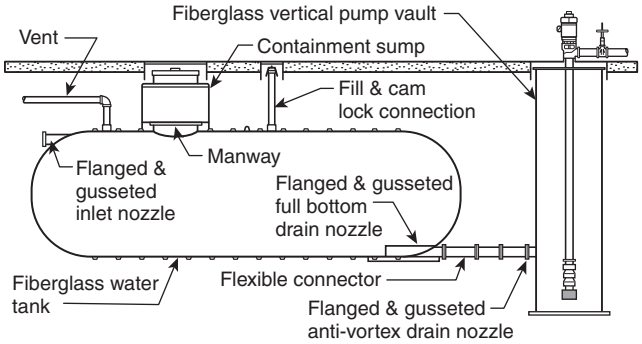

FIGURE B.1(x) Typical Fiberglass Underground Water Tank with Fiberglass Pump Vault.

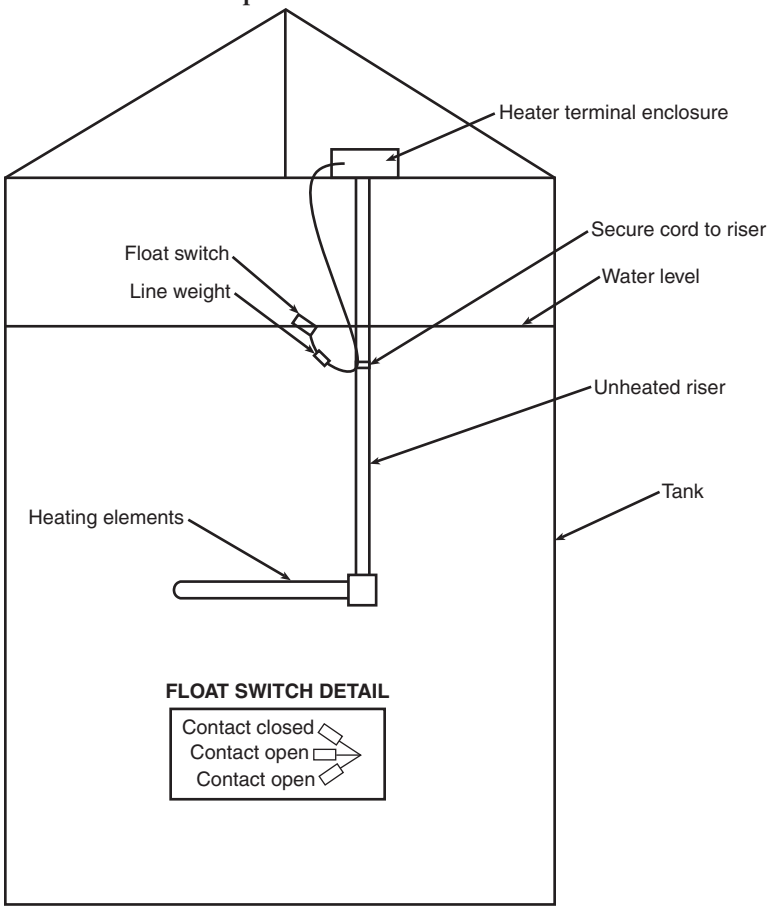

N **FIGURE B.1(y) Top-Mounted Immersion Tank Heater.**

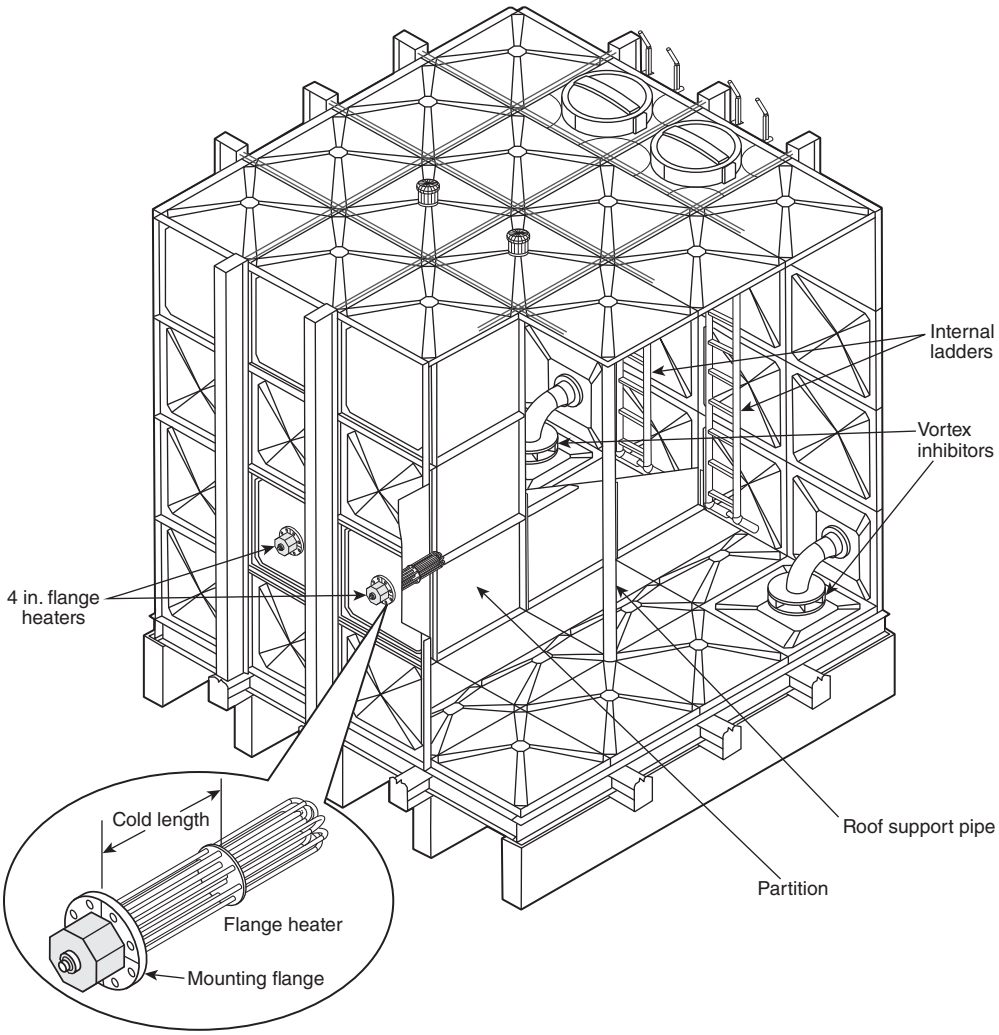

N **FIGURE B.1(z) Two Compartment FPR Panel-Type Tank with Flange Immersion Heater.**

Annex C Informational References

Δ **C.1 Referenced Publications.** The documents or portions thereof listed in this annex are referenced within the informational sections of this standard and are not part of the requirements of this document unless also listed in Chapter 2 for other reasons.

Δ **C.1.1 NFPA Publications.** National Fire Protection Association, 1 Batterymarch Park, Quincy, MA 02169-7471.

NFPA 11, *Standard for Low-, Medium-, and High-Expansion Foam*, 2016 edition.

NFPA 13, *Standard for the Installation of Sprinkler Systems*, 2016 edition.

NFPA 14, *Standard for the Installation of Standpipe and Hose Systems*, 2016 edition.

NFPA 15, *Standard for Water Spray Fixed Systems for Fire Protection*, 2017 edition.

NFPA 16, *Standard for the Installation of Foam-Water Sprinkler and Foam-Water Spray Systems*, 2015 edition.

NFPA 20, *Standard for the Installation of Stationary Pumps for Fire Protection*, 2016 edition.

NFPA 24, *Standard for the Installation of Private Fire Service Mains and Their Appurtenances*, 2016 edition.

NFPA 1144, *Standard for Reducing Structure Ignition Hazards from Wildland Fire*, 2018 edition.

C.1.2 Other Publications.

Δ **C.1.2.1 ASME Publications.** American Society of Mechanical Engineers, Two Park Avenue, New York, NY 10016-5990.

Boiler and Pressure Vessel Code, 2015.

C.1.2.2 AWWA Publications. American Water Works Association, 6666 West Quincy Avenue, Denver, CO 80235.

AWWA D100, *Welded Steel Tanks for Water Storage*, 2011.

AWWA D103, *Factory-Coated Bolted Steel Tanks for Water Storage*, 2009.

N **C.1.2.3 NWTI Publications.** National Wood Tank Institute, 5500 N. Water St., P.O. Box 2755, Philadelphia, PA 19120.

NWTI Bulletin S82, Specifications for Tanks and Pipes, 1982.

C.2 Informational References.

N **C.2.1 ASTM Publications.** ASTM International, 100 Barr Harbor Drive, P.O. Box C700, West Conshohocken, PA 19428-2959.

ASTM 6/A6M, *Standard Specification for General Requirements for Rolled Structural Steel Bars, Plates, Shapes, and Sheet Piling*, 2014.

ASTM A20/A20M, *Standard Specification for General Requirements for Steel Plates for Pressure Vessels*, 2015.

ASTM A27/A27M, *Standard Specification for Steel Castings, Carbon, for General Application*, 2013.

ASTM A105/A105M, *Standard Specification for Carbon Steel Forgings for Piping Applications*, 2014.

ASTM A181/A181M, *Standard Specification for Carbon Steel Forgings, for General-Purpose Piping*, 2014.

ASTM A193/A193M, *Standard Specification for Alloy-Steel Bolting for High Temperature or High Pressure Service and Other Special Purpose Applications*, 2014A.

ASTM A572/A572M, *Standard Specification for High-Strength Low-Alloy Columbium-Vanadium Structural Steel*, 2015.

ASTM A615/A615M, *Standard Specification for Deformed and Plain Billet-Steel Bars for Concrete Reinforcement*, 2016.

ASTM A668/A668M, *Standard Specification for Steel Forgings, Carbon and Alloy, for General Industrial Use*, 2015.

ASTM A1011/A1011M, *Standard Specification for Steel, Sheet and Strip, Hot-Rolled, Carbon, Structural, High-Strength Low-Alloy and High-Strength Low-Alloy with Improved Formability*, 2015.

ASTM D1171, *Standard Test Method for Rubber Deterioration — Surface Ozone Cracking Outdoors or Chamber (Triangular Specimens)*, 2016.

ASTM F1554, *Standard Specification for Anchor Bolts Steel 36, 55 and 105–KSI Yield Strength*, 2011.

N **C.2.2 AWS Publications.** American Welding Society, 8669 NW 36 Street, #130, Miami, FL 33166-6672.

AWS A5.1/A5.1M, *Specification for Carbon Steel Electrodes for Shielded Metal Arc Welding*, 2012.

N **C.2.3 AWWA Publications.** American Water Works Association, 6666 West Quincy Avenue, Denver, CO 80235.

AWWA C652, *Disinfection of Water Storage Facilities*, 2011.

C.3 References for Extracts in Informational Sections. (Reserved)

Index

Copyright © 2017 National Fire Protection Association. All Rights Reserved.

The copyright in this index is separate and distinct from the copyright in the document that it indexes. The licensing provisions set forth for the document are not applicable to this index. This index may not be reproduced in whole or in part by any means without the express written permission of NFPA.

-A-

Acceptance Test Requirements, Chap. 17
- Anti-Vortex Plate Inspection, 17.11
- Bolted Steel Tanks, 17.4, A.17.4
- Concrete Tanks, 17.7
  - Leakage Testing, 17.7.1
  - Measurement, 17.7.3
  - Preparation, 17.7.2
- Disposal of Test Water, 17.10
- Embankment-Supported Coated Fabric Tanks, 17.6
- Fiberglass-Reinforced Plastic Tanks — Hydrostatic Test, 17.9
- Inspection of Completed Equipment, 17.1
- Pressure Tanks, 17.5
- Testing, 17.2
- Welded Steel Tanks, 17.3
  - Flat Bottoms, 17.3.1
  - General, 17.3.2
- Wood Tanks, 17.8

Approved
- Definition, 3.2.1, A.3.2.1

Authority Having Jurisdiction (AHJ)
- Definition, 3.2.2, A.3.2.2

-C-

Concrete Gravity Tanks and Suction Tanks, Chap. 10
- Earthquake Load, 10.4
- General, 10.1
- Prestressed Tanks, 10.2
- Standard Capacities, 10.3
- Wall Treatments, 10.5

-D-

Definitions, Chap. 3

-E-

Embankment-Supported Coated Fabric Suction Tanks, Chap. 9
- Embankment Preparation and Tank Installation Procedure, 9.4
  - Foundation, 9.4.1
  - Installation, 9.4.2
- General, 9.1
- Materials, 9.3
  - Construction, 9.3.1
  - Design, 9.3.2
- Pipe Connections and Fittings, 9.6
  - Fittings Attached to Tank, 9.6.2
  - General Information, 9.6.1
  - Water-Level Gauge, 9.6.3
- Standard Capacities, 9.2
- Tank Sump and Support for Bottom Fittings, 9.5
  - Finish, 9.5.2
  - Inlet/Outlet, 9.5.1, A.9.5.1

Explanatory Material, Annex A

-F-

Factory-Coated, Bolted Carbon Steel Tanks, Chap. 6
- Corrosion Protection, 6.3
- General, 6.1
  - Form, 6.1.3
  - Standard Capacity, 6.1.2
- Materials, Fabrication, and Installation, 6.2
- Structural Shapes, 6.4

Fiberglass-Reinforced Plastic Tanks, Chap. 11
- Application, 11.2, A.11.2
- General, 11.1
- Monolithic Tanks, 11.4
- Protection of Aboveground Tanks, 11.6
- Protection of Buried Tanks, 11.5
- Tank Connections, 11.7
- Tank Specification, 11.3, A.11.3

-G-

General Information, Chap. 4
- Attachments to Tank Structures, 4.8
- Capacity and Elevation, 4.1
- Lightning Protection, 4.9
- Loads, 4.12
  - Balcony, Platform, and Ladder Loads, 4.12.5
  - Columns and Struts, 4.12.6
  - Dead Load, 4.12.1
  - Earthquake Load, 4.12.4
  - Live Load, 4.12.2
  - Roof Construction, 4.12.8
  - Stress Increases, 4.12.7
  - Wind Load, 4.12.3
- Location of Tanks, 4.3
- National Standards, 4.11
- Plans, 4.6
  - Approval of Layouts, 4.6.2
- Roof Vent, 4.15
- Roofs, 4.14
- Strength, 4.10
- Tank Contractor Responsibility, 4.7
  - Cleaning Up, 4.7.3
- Tank Materials, 4.4
- Test Reports, 4.16
- Water Sources, 4.2
- Welding, 4.13
- Workmanship, 4.5

-H-

Holiday
Definition, 3.3.1

-I-

Informational References, Annex C
Inspection, Testing, and Maintenance of Water Tanks, Chap. 18
General, 18.1
Introduction, Chap. 1
Equivalency, 1.4
Purpose, 1.2
Retroactivity, 1.3
Scope, 1.1
Types of Tanks, 1.5
Bladder Tanks Not Within NFPA 22 Scope, 1.5.1
Bladder Tanks Within the Scope of NFPA 22, 1.5.2
Units, 1.6

-L-

Labeled
Definition, 3.2.3
Listed
Definition, 3.2.4, A.3.2.4

-P-

Pipe Connections and Fittings, Chap. 14
Break Tanks, 14.5, A.14.5
Break Tank Size, 14.5.1
Refill Mechanism, 14.5.2
Clean-Out and Drain, 14.7
For Elevated Flat-Bottom Tanks, 14.7.3
Handhole, 14.7.1
Manholes, 14.7.2
Tank Riser Drain, 14.7.4
Connections for Other Than Fire Protection, 14.8
Dual-Service Tanks, 14.8.1
Pipe for Other Than Fire Protection Purposes, 14.8.2
Discharge Pipe, 14.2
Anti-Vortex Plate Assembly, 14.2.13, A.14.2.13
At Roofs and Floors, 14.2.1
Braces, 14.2.4
Check Valve, 14.2.11
Controlling Valves, 14.2.12
Expansion Joint, 14.2.7
Offsets, 14.2.6
Pipe Material, 14.2.3
Aboveground Pipe Material, 14.2.3.2
Rigid Connection, 14.2.8
Settling Basin, 14.2.10
Size, 14.2.2
Support, 14.2.5
Swing Joints, 14.2.9
Expansion Joint, 14.3
Body, 14.3.4
Clearances, 14.3.3
Connection to Tank, 14.3.1
General Design, 14.3.2
Gland, 14.3.5
Packing, 14.3.7
Slip-Tube, 14.3.6
Filling, 14.4
Bypass Around Check Valve, 14.4.5
Filling from Drinking Water Supply, 14.4.8
Filling Pipe at Roofs and Floors, 14.4.9
Filling Pumps, 14.4.6
Suction Tanks, 14.4.10
General Information, 14.1, A.14.1
Connections for Use Other Than for Fire Protection, 14.1.7, A.14.1.7
At Roofs and Floors, 14.1.7.5, A.14.1.7.5
Discharge Piping Protection, 14.1.11
Frostproof Casing, 14.1.9, A.14.1.9
Heater Thermometer, 14.1.6, A.14.1.6
Placing Tank in Service, 14.1.3, A.14.1.3
Precautions During Repairs, 14.1.5
Steel Pipe, 14.1.12
Tanks with Large Tank Risers, 14.1.10
The Contract, 14.1.4
Water-Level Gauge, 14.1.8, A.14.1.8
Watertight Intersections at Roofs and Floors, 14.1.1
Overflow, 14.6
Inlet, 14.6.2
Inside Pipe, 14.6.4
Size, 14.6.1
Stub Pipe, 14.6.3, A.14.6.3
Sensors, 14.9
Pressure Tanks, Chap. 7
General, 7.1
Air Lock, 7.1.5, A.7.1.5
Buried Tanks, 7.1.10
Capacity, 7.1.3
Construction, 7.1.7
General, 7.1.7.1, A.7.1.7.1
Painting, 7.1.7.3
Supports, 7.1.7.2
Housing, 7.1.9
Location, 7.1.6
Marking, 7.1.8
General, 7.1.8.1
Nameplate, 7.1.8.2
Water-Level Indicator, 7.1.8.3
Service, 7.1.1
Water and Air Pressure, 7.1.4
Pipe Connections and Fittings, 7.2
Air Compressor, 7.2.10
Air Pipe, 7.2.4
Air-Pressure Gauge, 7.2.6
Arrangement, 7.2.11
Emergency Drain, 7.2.8
Filling Pipe, 7.2.3
Fire Protection, 7.2.13
Openings, 7.2.1
Safety Appliances, 7.2.7
Tank Discharge, 7.2.2

Water Filling Supply, 7.2.9
Water-Level Gauge, 7.2.5
Watertight Intersections at Roofs and Floors, 7.2.12, A.7.2.12

-R-

Referenced Publications, Chap. 2

-S-

Shall
Definition, 3.2.5
Should
Definition, 3.2.6
Standard
Definition, 3.2.7
Steel Tank Towers, Chap. 13
Accessories, 13.7
Balcony, 13.7.5
Connections, 13.7.1
Field Painting, 13.7.8
Ladders — Details, 13.7.3
Ladders — General, 13.7.2
Painting, 13.7.7
Painting Application, 13.7.9
Painting Inaccessible Parts, 13.7.6, A.13.7.6
Walkway, 13.7.4
Details of Design, 13.5
Anchor Bolts, 13.5.22
Base Braces, 13.5.19
Circular Girder with Inclined Columns, 13.5.14
Circular Girder with Vertical Columns, 13.5.15
Clevises, Forked Ends, and Turnbuckles, 13.5.9
Column Bases and Caps, 13.5.13
Columns, 13.5.3
Splices, 13.5.3.1
Strength of Diaphragm in Tubular Columns, 13.5.3.2
Combined Shapes, 13.5.4
Connections — General, 13.5.6
Grillage, 13.5.18
Interior Bracing, 13.5.16
Large Tank Risers, Water Spheres, 13.5.21
Length of Tension Members, 13.5.12
Minimum Thickness — General, 13.5.2
Net Area of Pin-Plate, 13.5.8
Pins, 13.5.7
Sections, 13.5.1
Starred Angles, 13.5.5
Tank Connection, 13.5.10
Tie Plates, 13.5.11
Top Struts, 13.5.17
Web Stiffeners, 13.5.20
General, 13.1
Details, 13.1.4
Height, 13.1.2
Strength, 13.1.3
Loads, 13.3
Balcony and Ladder Loads, 13.3.5
Dead Load, 13.3.1
Earthquake Load, 13.3.6
Live Load, 13.3.2
Live Load — Large Tank Risers, 13.3.3
Wind Load, 13.3.4
Materials, 13.2
Bolts, Anchor Bolts, and Rods, 13.2.2
National Standards, 13.2.4
Pins, 13.2.3
Plates, Shapes, and Tubular Columns, 13.2.1
Plates, 13.2.1.1
Shapes, 13.2.1.2
Tubular Columns, 13.2.1.3
Unit Stresses, 13.4
Bearing, 13.4.5
Bending, 13.4.3
Combined Stresses, 13.4.6
Fillet and Groove Welds, 13.4.8
General, 13.4.1
Shearing, 13.4.4
Slenderness Ratio, 13.4.2
Wind and Earthquake Allowances, 13.4.7
Earthquake, 13.4.7.2
Wind, 13.4.7.1
Workmanship, 13.6
Alignment, 13.6.7
Assembly, 13.6.6
Grouting of Base Plates, 13.6.5
Shearing, 13.6.1
Straightening and Fitting, 13.6.2
Threads and Nuts, 13.6.4
Tubular Column Distortion, 13.6.8
Use of Bolts and Welding, 13.6.3

-T-

Tank
Bladder Tank
Definition, 3.3.2.1, A.3.3.2.1
Break Tank
Definition, 3.3.2.2
Definition, 3.3.2
Gravity Tank
Definition, 3.3.2.3, A.3.3.2.3
Pressure Tank
Definition, 3.3.2.4, A.3.3.2.4
Suction Tank
Definition, 3.3.2.5
Tank and Tower Foundations in the Ground, Chap. 12
Anchorage, 12.4
Concrete Specifications, 12.1
Foundation Piers for Elevated Tanks, 12.3
Grouting, 12.5
Soil-Bearing Pressures, 12.6
Suction Tank Foundations, 12.2
Tank Heating, Chap. 16
General, 16.1
Heat Insulation, 16.1.6
Heater Water-Circulating Pipes, 16.1.7, A.16.1.7

Cold-Water Pipe, 16.1.7.5
Hot-Water Pipe, 16.1.7.4
Location, 16.1.5, A.16.1.5
Operation, 16.1.9
Relief Valve, 16.1.8
Heating for Embankment-Supported Coated Fabric Suction Tanks, 16.5
Heating Requirements, 16.2, A.16.2
Heating Systems, 16.3
Coal-Burning Water Heaters, 16.3.4
Direct Discharge of Steam, 16.3.10
Electric Immersion Heaters, 16.3.6
Gas-Fired Water Heaters, 16.3.2
Heating with Hot Water, 16.3.8
Oil-Fired Water Heaters, 16.3.3
Recirculating Electric Water Heaters, 16.3.5
Solar Heating, 16.3.11
Steam Coils Inside Tanks, 16.3.9
Steam Water Heaters, 16.3.1, A.16.3.1
Multiple Heaters, 16.3.1.8
Steam Return, 16.3.1.7
Steam Supply, 16.3.1.6
Vertical Steam Radiators, 16.3.7
Tank Insulation, 16.4
Tank Riser
Definition, 3.3.3, A.3.3.3
Typical Installations, Annex B
General, B.1

-V-

Valve Enclosures and Frost Protection, Chap. 15
Frostproof Casing, 15.2
Bottom, 15.2.4
General, 15.2.1
Paint, 15.2.5
Top, 15.2.3
Wood, 15.2.2
Valve Pit or House and Heater House, 15.1
Design of Valve Pit, 15.1.4
Loads, 15.1.4.2
Dimensions, 15.1.3, A.15.1.3
General, 15.1.1
Heater House, 15.1.9
Heating Valve House or Pit and Heater House, 15.1.10
Materials, 15.1.2, A.15.1.2
Pit Drain, 15.1.8, A.15.1.8
Pit Ladder, 15.1.6
Pit Manhole, 15.1.5
Waterproofing Pit, 15.1.7

-W-

Welded-Carbon Steel and Composite Concrete and Carbon Steel Gravity Tanks and Suction Tanks, Chap. 5
Corrosion Protection for Bottom Plates on Soil or Concrete, 5.4
General, 5.1
Capacity, 5.1.2
Form, 5.1.4
Standard Sizes, 5.1.3
Heavy Metals, 5.8
Materials, 5.2
Painting and Corrosion Protection, 5.6
Painting Application, 5.7
Painting Inaccessible Areas, 5.5
Preventing Ice Damage, 5.3
Wood Gravity Tanks and Suction Tanks, Chap. 8
Accessories, 8.7
Balcony Clearance, 8.7.11
Balcony Floor, 8.7.10
Balcony Opening, 8.7.14
Balcony Railing, 8.7.13
Balcony Supports, 8.7.12
Balcony — General, 8.7.9
Conical Roof, 8.7.3, A.8.7.3
Field Painting — Steelwork, 8.7.17
Flat Cover, 8.7.2
Inside Ladder, 8.7.8
Ladders — General, 8.7.6
Lightning Protection, 8.7.20
Outside Ladders, 8.7.7
Painting, 8.7.16
Painting Application, 8.7.18
Painting Inaccessible Parts, 8.7.15
Preservatives — Woodwork, 8.7.19
Roof Anchorage, 8.7.4
Roof Hatches, 8.7.5
Roof — General, 8.7.1
Details of Design, 8.5
Air Circulation Under Tank Bottom, 8.5.9
Hoop Lugs, 8.5.6
Hoop Schedules, 8.5.3, A.8.5.3
Hoop Sizes, 8.5.2
Hoops at Bottom, 8.5.4
Hoops at Top, 8.5.5
Lumber Thickness, 8.5.1
Main Supports, 8.5.7
Spacing of Supports, 8.5.8
General, 8.1
Capacity, 8.1.2
Standard Sizes, 8.1.3, A.8.1.3
Strength, 8.1.4
Loads, 8.3
Balcony and Ladder Loads, 8.3.5
Dead Load, 8.3.1
Earthquake Load, 8.3.4
Live Load, 8.3.2
Wind Load, 8.3.3
Material, 8.2
Hoop Lugs, 8.2.5
Hoops, 8.2.4
Lumber — General, 8.2.1
Lumber — Staves and Bottom, 8.2.2
Treatment, 8.2.2.3
Steel Shapes, 8.2.6
Timber Supports, 8.2.3

Unit Stresses, 8.4
General, 8.4.1, A.8.4.1
Tension Hoops, 8.4.1.1
Timber, 8.4.1.2
Wind and Earthquake Allowance, 8.4.2
Workmanship, 8.6
Chime, 8.6.3
Clearance at Supports, 8.6.9
Croze, 8.6.2
Dowels, 8.6.4
Extra Staves, 8.6.7
Hoop Forming, 8.6.10
Hoop Threads, 8.6.11
Hoop Tightening, 8.6.12
Joints at Bottom, 8.6.6
Lumber Edges and Surfaces, 8.6.1, A.8.6.1
Marking of Staves, 8.6.8
Removal of Rubbish, 8.6.13
Splices, 8.6.5

Sequence of Events for the Standards Development Process

Once the current edition is published, a Standard is opened for Public Input.

Step 1 – Input Stage

- Input accepted from the public or other committees for consideration to develop the First Draft
- Technical Committee holds First Draft Meeting to revise Standard (23 weeks); Technical Committee(s) with Correlating Committee (10 weeks)
- Technical Committee ballots on First Draft (12 weeks); Technical Committee(s) with Correlating Committee (11 weeks)
- Correlating Committee First Draft Meeting (9 weeks)
- Correlating Committee ballots on First Draft (5 weeks)
- First Draft Report posted on the document information page

Step 2 – Comment Stage

- Public Comments accepted on First Draft (10 weeks) following posting of First Draft Report
- If Standard does not receive Public Comments and the Technical Committee chooses not to hold a Second Draft meeting, the Standard becomes a Consent Standard and is sent directly to the Standards Council for issuance (see Step 4) or
- Technical Committee holds Second Draft Meeting (21 weeks); Technical Committee(s) with Correlating Committee (7 weeks)
- Technical Committee ballots on Second Draft (11 weeks); Technical Committee(s) with Correlating Committee (10 weeks)
- Correlating Committee Second Draft Meeting (9 weeks)
- Correlating Committee ballots on Second Draft (8 weeks)
- Second Draft Report posted on the document information page

Step 3 – NFPA Technical Meeting

- Notice of Intent to Make a Motion (NITMAM) accepted (5 weeks) following the posting of Second Draft Report
- NITMAMs are reviewed and valid motions are certified by the Motions Committee for presentation at the NFPA Technical Meeting
- NFPA membership meets each June at the NFPA Technical Meeting to act on Standards with "Certified Amending Motions" (certified NITMAMs)
- Committee(s) vote on any successful amendments to the Technical Committee Reports made by the NFPA membership at the NFPA Technical Meeting

Step 4 – Council Appeals and Issuance of Standard

- Notification of intent to file an appeal to the Standards Council on Technical Meeting action must be filed within 20 days of the NFPA Technical Meeting
- Standards Council decides, based on all evidence, whether to issue the standard or to take other action

Notes:

1. Time periods are approximate; refer to published schedules for actual dates.
2. Annual revision cycle documents with certified amending motions take approximately 101 weeks to complete.
3. Fall revision cycle documents receiving certified amending motions take approximately 141 weeks to complete.

Committee Membership Classifications[1,2,3,4]

The following classifications apply to Committee members and represent their principal interest in the activity of the Committee.

1. M *Manufacturer:* A representative of a maker or marketer of a product, assembly, or system, or portion thereof, that is affected by the standard.
2. U *User:* A representative of an entity that is subject to the provisions of the standard or that voluntarily uses the standard.
3. IM *Installer/Maintainer:* A representative of an entity that is in the business of installing or maintaining a product, assembly, or system affected by the standard.
4. L *Labor:* A labor representative or employee concerned with safety in the workplace.
5. RT *Applied Research/Testing Laboratory:* A representative of an independent testing laboratory or independent applied research organization that promulgates and/or enforces standards.
6. E *Enforcing Authority:* A representative of an agency or an organization that promulgates and/or enforces standards.
7. I *Insurance:* A representative of an insurance company, broker, agent, bureau, or inspection agency.
8. C *Consumer:* A person who is or represents the ultimate purchaser of a product, system, or service affected by the standard, but who is not included in (2).
9. SE *Special Expert:* A person not representing (1) through (8) and who has special expertise in the scope of the standard or portion thereof.

NOTE 1: "Standard" connotes code, standard, recommended practice, or guide.

NOTE 2: A representative includes an employee.

NOTE 3: While these classifications will be used by the Standards Council to achieve a balance for Technical Committees, the Standards Council may determine that new classifications of member or unique interests need representation in order to foster the best possible Committee deliberations on any project. In this connection, the Standards Council may make such appointments as it deems appropriate in the public interest, such as the classification of "Utilities" in the National Electrical Code Committee.

NOTE 4: Representatives of subsidiaries of any group are generally considered to have the same classification as the parent organization.

Submitting Public Input / Public Comment Through the Online Submission System

Soon after the current edition is published, a Standard is open for Public Input.

Before accessing the Online Submission System, you must first sign in at www.nfpa.org. *Note: You will be asked to sign-in or create a free online account with NFPA before using this system:*

a. Click on Sign In at the upper right side of the page.
b. Under the Codes and Standards heading, click on the "List of NFPA Codes & Standards," and then select your document from the list or use one of the search features.

OR

a. Go directly to your specific document information page by typing the convenient shortcut link of www.nfpa.org/document# (Example: NFPA 921 would be www.nfpa.org/921). Sign in at the upper right side of the page.

To begin your Public Input, select the link "The next edition of this standard is now open for Public Input" located on the About tab, Current & Prior Editions tab, and the Next Edition tab. Alternatively, the Next Edition tab includes a link to Submit Public Input online.

At this point, the NFPA Standards Development Site will open showing details for the document you have selected. This "Document Home" page site includes an explanatory introduction, information on the current document phase and closing date, a left-hand navigation panel that includes useful links, a document Table of Contents, and icons at the top you can click for Help when using the site. The Help icons and navigation panel will be visible except when you are actually in the process of creating a Public Input.

Once the First Draft Report becomes available there is a Public Comment period during which anyone may submit a Public Comment on the First Draft. Any objections or further related changes to the content of the First Draft must be submitted at the Comment stage.

To submit a Public Comment you may access the online submission system utilizing the same steps as previously explained for the submission of Public Input.

For further information on submitting public input and public comments, go to: http://www.nfpa.org/publicinput.

Other Resources Available on the Document Information Pages

About tab: View general document and subject-related information.

Current & Prior Editions tab: Research current and previous edition information on a Standard.

Next Edition tab: Follow the committee's progress in the processing of a Standard in its next revision cycle.

Technical Committee tab: View current committee member rosters or apply to a committee.

Technical Questions tab: For members and Public Sector Officials/AHJs to submit questions about codes and standards to NFPA staff. Our Technical Questions Service provides a convenient way to receive timely and consistent technical assistance when you need to know more about NFPA codes and standards relevant to your work. Responses are provided by NFPA staff on an informal basis.

Products & Training tab: List of NFPA's publications and training available for purchase.

Information on the NFPA Standards Development Process

I. Applicable Regulations. The primary rules governing the processing of NFPA standards (codes, standards, recommended practices, and guides) are the NFPA *Regulations Governing the Development of NFPA Standards (Regs)*. Other applicable rules include NFPA *Bylaws*, NFPA *Technical Meeting Convention Rules*, NFPA *Guide for the Conduct of Participants in the NFPA Standards Development Process*, and the NFPA *Regulations Governing Petitions to the Board of Directors from Decisions of the Standards Council*. Most of these rules and regulations are contained in the *NFPA Standards Directory*. For copies of the *Directory*, contact Codes and Standards Administration at NFPA Headquarters; all these documents are also available on the NFPA website at "www.nfpa.org."

The following is general information on the NFPA process. All participants, however, should refer to the actual rules and regulations for a full understanding of this process and for the criteria that govern participation.

II. Technical Committee Report. The Technical Committee Report is defined as "the Report of the responsible Committee(s), in accordance with the Regulations, in preparation of a new or revised NFPA Standard." The Technical Committee Report is in two parts and consists of the First Draft Report and the Second Draft Report. (See *Regs* at Section 1.4.)

III. Step 1: First Draft Report. The First Draft Report is defined as "Part one of the Technical Committee Report, which documents the Input Stage." The First Draft Report consists of the First Draft, Public Input, Committee Input, Committee and Correlating Committee Statements, Correlating Notes, and Ballot Statements. (See *Regs* at 4.2.5.2 and Section 4.3.) Any objection to an action in the First Draft Report must be raised through the filing of an appropriate Comment for consideration in the Second Draft Report or the objection will be considered resolved. [See *Regs* at 4.3.1(b).]

IV. Step 2: Second Draft Report. The Second Draft Report is defined as "Part two of the Technical Committee Report, which documents the Comment Stage." The Second Draft Report consists of the Second Draft, Public Comments with corresponding Committee Actions and Committee Statements, Correlating Notes and their respective Committee Statements, Committee Comments, Correlating Revisions, and Ballot Statements. (See *Regs* at 4.2.5.2 and Section 4.4.) The First Draft Report and the Second Draft Report together constitute the Technical Committee Report. Any outstanding objection following the Second Draft Report must be raised through an appropriate Amending Motion at the NFPA Technical Meeting or the objection will be considered resolved. [See *Regs* at 4.4.1(b).]

V. Step 3a: Action at NFPA Technical Meeting. Following the publication of the Second Draft Report, there is a period during which those wishing to make proper Amending Motions on the Technical Committee Reports must signal their intention by submitting a Notice of Intent to Make a Motion (NITMAM). (See *Regs* at 4.5.2.) Standards that receive notice of proper Amending Motions (Certified Amending Motions) will be presented for action at the annual June NFPA Technical Meeting. At the meeting, the NFPA membership can consider and act on these Certified Amending Motions as well as Follow-up Amending Motions, that is, motions that become necessary as a result of a previous successful Amending Motion. (See 4.5.3.2 through 4.5.3.6 and Table 1, Columns 1-3 of *Regs* for a summary of the available Amending Motions and who may make them.) Any outstanding objection following action at an NFPA Technical Meeting (and any further Technical Committee consideration following successful Amending Motions, see *Regs* at 4.5.3.7 through 4.6.5.3) must be raised through an appeal to the Standards Council or it will be considered to be resolved.

VI. Step 3b: Documents Forwarded Directly to the Council. Where no NITMAM is received and certified in accordance with the Technical Meeting Convention Rules, the standard is forwarded directly to the Standards Council for action on issuance. Objections are deemed to be resolved for these documents. (See *Regs* at 4.5.2.5.)

VII. Step 4a: Council Appeals. Anyone can appeal to the Standards Council concerning procedural or substantive matters related to the development, content, or issuance of any document of the NFPA or on matters within the purview of the authority of the Council, as established by the Bylaws and as determined by the Board of Directors. Such appeals must be in written form and filed with the Secretary of the Standards Council (see *Regs* at Section 1.6). Time constraints for filing an appeal must be in accordance with 1.6.2 of the *Regs*. Objections are deemed to be resolved if not pursued at this level.

VIII. Step 4b: Document Issuance. The Standards Council is the issuer of all documents (see Article 8 of *Bylaws*). The Council acts on the issuance of a document presented for action at an NFPA Technical Meeting within 75 days from the date of the recommendation from the NFPA Technical Meeting, unless this period is extended by the Council (see *Regs* at 4.7.2). For documents forwarded directly to the Standards Council, the Council acts on the issuance of the document at its next scheduled meeting, or at such other meeting as the Council may determine (see *Regs* at 4.5.2.5 and 4.7.4).

IX. Petitions to the Board of Directors. The Standards Council has been delegated the responsibility for the administration of the codes and standards development process and the issuance of documents. However, where extraordinary circumstances requiring the intervention of the Board of Directors exist, the Board of Directors may take any action necessary to fulfill its obligations to preserve the integrity of the codes and standards development process and to protect the interests of the NFPA. The rules for petitioning the Board of Directors can be found in the *Regulations Governing Petitions to the Board of Directors from Decisions of the Standards Council* and in Section 1.7 of the *Regs*.

X. For More Information. The program for the NFPA Technical Meeting (as well as the NFPA website as information becomes available) should be consulted for the date on which each report scheduled for consideration at the meeting will be presented. To view the First Draft Report and Second Draft Report as well as information on NFPA rules and for up-to-date information on schedules and deadlines for processing NFPA documents, check the NFPA website (www.nfpa.org/docinfo) or contact NFPA Codes & Standards Administration at (617) 984-7246.

Xchange™

The place to connect online with your fire, electrical, and life safety peers

Have a question about the code or standard you're reading now?

NFPA Xchange™ can help!

NFPA Xchange™ brings together over 30,000 professionals worldwide, asking and answering each other's questions, sharing ideas, and discussing the issues impacting your industry today.

NFPA Xchange™ is free to join and offers:

- A robust collection of previously asked and answered questions to search
- Access to thousands of peers for problem-solving and on-the-job advice
- NFPA blogs, white papers, and webinars in one convenient place

NFPA members also enjoy **Xchange™ Members Only**, the online space for technical questions* answered by NFPA staff, exclusive NFPA live events, and premier access to curated content.

Join NFPA Xchange™ TODAY!

www.nfpa.org/xchange

Xchange Today. Safer Tomorrow.

*For the full terms of use, please visit nfpa.org/standard_items/terms-of-use#xchange. NFPA® is a registered trademark of the National Fire Protection Association, Quincy, MA 02169.