NFPA®

24

Standard for the Installation of Private Fire Service Mains and Their Appurtenances

2019

NFPA®

This File is Uploaded By

4MechEngineer.com

WIKIMEP.com

You can Follow US

Facebook/4MechEngineer

Linked-in/4MechEngineer

Instagram/4MechEngineer

YouTube/4MechEngineer

Google+/4MechEngineer

Twitter/4MechEngineer

IMPORTANT NOTICES AND DISCLAIMERS CONCERNING NFPA® STANDARDS

NOTICE AND DISCLAIMER OF LIABILITY CONCERNING THE USE OF NFPA STANDARDS

NFPA® codes, standards, recommended practices, and guides ("NFPA Standards"), of which the document contained herein is one, are developed through a consensus standards development process approved by the American National Standards Institute. This process brings together volunteers representing varied viewpoints and interests to achieve consensus on fire and other safety issues. While the NFPA administers the process and establishes rules to promote fairness in the development of consensus, it does not independently test, evaluate, or verify the accuracy of any information or the soundness of any judgments contained in NFPA Standards.

The NFPA disclaims liability for any personal injury, property, or other damages of any nature whatsoever, whether special, indirect, consequential or compensatory, directly or indirectly resulting from the publication, use of, or reliance on NFPA Standards. The NFPA also makes no guaranty or warranty as to the accuracy or completeness of any information published herein.

In issuing and making NFPA Standards available, the NFPA is not undertaking to render professional or other services for or on behalf of any person or entity. Nor is the NFPA undertaking to perform any duty owed by any person or entity to someone else. Anyone using this document should rely on his or her own independent judgment or, as appropriate, seek the advice of a competent professional in determining the exercise of reasonable care in any given circumstances.

The NFPA has no power, nor does it undertake, to police or enforce compliance with the contents of NFPA Standards. Nor does the NFPA list, certify, test, or inspect products, designs, or installations for compliance with this document. Any certification or other statement of compliance with the requirements of this document shall not be attributable to the NFPA and is solely the responsibility of the certifier or maker of the statement.

REVISION SYMBOLS IDENTIFYING CHANGES FROM THE PREVIOUS EDITION

Text revisions are shaded. A Δ before a section number indicates that words within that section were deleted and a Δ to the left of a table or figure number indicates a revision to an existing table or figure. When a chapter was heavily revised, the entire chapter is marked throughout with the Δ symbol. Where one or more sections were deleted, a • is placed between the remaining sections. Chapters, annexes, sections, figures, and tables that are new are indicated with an *N*.

Note that these indicators are a guide. Rearrangement of sections may not be captured in the markup, but users can view complete revision details in the First and Second Draft Reports located in the archived revision information section of each code at www.nfpa.org/docinfo. Any subsequent changes from the NFPA Technical Meeting, Tentative Interim Amendments, and Errata are also located there.

REMINDER: UPDATING OF NFPA STANDARDS

Users of NFPA codes, standards, recommended practices, and guides ("NFPA Standards") should be aware that NFPA Standards may be amended from time to time through the issuance of a Tentative Interim Amendment (TIA) or corrected by Errata. An official NFPA Standard at any point in time consists of the current edition of the document together with any TIAs and Errata then in effect.

To determine whether an NFPA Standard has been amended through the issuance of Tentative Interim Amendments or corrected by Errata, go to www.nfpa.org/docinfo to choose from the list of NFPA Standards or use the search feature to select the NFPA Standard number (e.g., NFPA 13). The document information page provides up-to-date document-specific information as well as postings of all existing TIAs and Errata. It also includes the option to register for an "Alert" feature to receive an automatic email notification when new updates and other information are posted regarding the document.

ISBN: 978-145592021-1 (PDF)
ISBN: 978-145592022-8 (eBook)

IMPORTANT NOTICES AND DISCLAIMERS CONCERNING NFPA® STANDARDS

ADDITIONAL NOTICES AND DISCLAIMERS

Updating of NFPA Standards

Users of NFPA codes, standards, recommended practices, and guides ("NFPA Standards") should be aware that these documents may be superseded at any time by the issuance of new editions or may be amended from time to time through the issuance of Tentative Interim Amendments or corrected by Errata. An official NFPA Standard at any point in time consists of the current edition of the document together with any Tentative Interim Amendments and any Errata then in effect. In order to determine whether a given document is the current edition and whether it has been amended through the issuance of Tentative Interim Amendments or corrected through the issuance of Errata, consult appropriate NFPA publications such as the National Fire Codes® Subscription Service, visit the NFPA website at www.nfpa.org, or contact the NFPA at the address listed below.

Interpretations of NFPA Standards

A statement, written or oral, that is not processed in accordance with Section 6 of the Regulations Governing the Development of NFPA Standards shall not be considered the official position of NFPA or any of its Committees and shall not be considered to be, nor be relied upon as, a Formal Interpretation.

Patents

The NFPA does not take any position with respect to the validity of any patent rights referenced in, related to, or asserted in connection with an NFPA Standard. The users of NFPA Standards bear the sole responsibility for determining the validity of any such patent rights, as well as the risk of infringement of such rights, and the NFPA disclaims liability for the infringement of any patent resulting from the use of or reliance on NFPA Standards.

NFPA adheres to the policy of the American National Standards Institute (ANSI) regarding the inclusion of patents in American National Standards ("the ANSI Patent Policy"), and hereby gives the following notice pursuant to that policy:

NOTICE: The user's attention is called to the possibility that compliance with an NFPA Standard may require use of an invention covered by patent rights. NFPA takes no position as to the validity of any such patent rights or as to whether such patent rights constitute or include essential patent claims under the ANSI Patent Policy. If, in connection with the ANSI Patent Policy, a patent holder has filed a statement of willingness to grant licenses under these rights on reasonable and nondiscriminatory terms and conditions to applicants desiring to obtain such a license, copies of such filed statements can be obtained, on request, from NFPA. For further information, contact the NFPA at the address listed below.

Law and Regulations

Users of NFPA Standards should consult applicable federal, state, and local laws and regulations. NFPA does not, by the publication of its codes, standards, recommended practices, and guides, intend to urge action that is not in compliance with applicable laws, and these documents may not be construed as doing so.

Copyrights

NFPA Standards are copyrighted. They are made available for a wide variety of both public and private uses. These include both use, by reference, in laws and regulations, and use in private self-regulation, standardization, and the promotion of safe practices and methods. By making these documents available for use and adoption by public authorities and private users, the NFPA does not waive any rights in copyright to these documents.

Use of NFPA Standards for regulatory purposes should be accomplished through adoption by reference. The term "adoption by reference" means the citing of title, edition, and publishing information only. Any deletions, additions, and changes desired by the adopting authority should be noted separately in the adopting instrument. In order to assist NFPA in following the uses made of its documents, adopting authorities are requested to notify the NFPA (Attention: Secretary, Standards Council) in writing of such use. For technical assistance and questions concerning adoption of NFPA Standards, contact NFPA at the address below.

For Further Information

All questions or other communications relating to NFPA Standards and all requests for information on NFPA procedures governing its codes and standards development process, including information on the procedures for requesting Formal Interpretations, for proposing Tentative Interim Amendments, and for proposing revisions to NFPA standards during regular revision cycles, should be sent to NFPA headquarters, addressed to the attention of the Secretary, Standards Council, NFPA, 1 Batterymarch Park, P.O. Box 9101, Quincy, MA 02269-9101; email: stds_admin@nfpa.org.

For more information about NFPA, visit the NFPA website at www.nfpa.org. All NFPA codes and standards can be viewed at no cost at www.nfpa.org/docinfo.

Copyright © 2018 National Fire Protection Association®. All Rights Reserved.

NFPA® 24

Standard for the

Installation of Private Fire Service Mains and Their Appurtenances

2019 Edition

This edition of NFPA 24, *Standard for the Installation of Private Fire Service Mains and Their Appurtenances*, was prepared by the Technical Committee on Private Water Supply Piping Systems and released by the Correlating Committee on Automatic Sprinkler Systems. It was issued by the Standards Council on May 4, 2018, with an effective date of May 24, 2018, and supersedes all previous editions.

This edition of NFPA 24 was approved as an American National Standard on May 24, 2018.

Origin and Development of NFPA 24

In 1903, the NFPA Committee on Hose and Hydrants first presented *Specifications for Mill Yard Hose Houses*, taken substantially from a standard published by the Eastern Factory Insurance Association. This text was revised and adopted in 1904. The NFPA Committee on Field Practice amended the Specifications in 1926, published as NFPA 25.

In 1925, the Committee on Field Practice prepared a *Standard on Outside Protection, Private Underground Piping Systems Supplying Water for Fire Extinguishment*, which was adopted by NFPA. It was largely taken from the 1920 edition of the NFPA *Automatic Sprinkler Standard*, Section M on Underground Pipes and Fittings. In September 1931, a revision was made, with the resulting standard designated as NFPA 24. In the 1981 edition, the title was changed from *Standard for Outside Protection* to *Standard for the Installation of Private Fire Service Mains and Their Appurtenances*.

In 1953, on recommendation of the Committee on Standpipes and Outside Protection, the two standards (NFPA 24 and NFPA 25) were completely revised and adopted as NFPA 24. Amendments were made leading to separate editions in 1955, 1959, 1962, 1963, 1965, 1966, 1968, 1969, 1970, 1973, 1977, 1981, 1983, and 1987.

The 1992 edition included amendments to further delineate the point at which the water supply stops and the fixed fire protection system begins. Minor changes were made concerning special topics such as thrust restraint and equipment provisions in valve pits.

The 1995 edition clarified requirements for aboveground and buried piping. Revisions were made to provide additional information regarding listing requirements, signage, valves, valve supervision, hydrant outlets, system attachments, piping materials, and thrust blocks. User friendliness of the document was also addressed.

The 2002 edition represented a complete revision of NFPA 24. Changes included reorganization and editorial modifications to comply with the *Manual of Style for NFPA Technical Committee Documents*. Additionally, all of the underground piping requirements were relocated into a new Chapter 10.

The 2007 edition was revised in five major areas: Chapter 10 was updated editorially, and minor technical changes were made. Newly established leakage test criteria, as well as updated requirements for thrust blocks and restrained joints, were added to Chapter 10. Two annexes were new to this edition: Annex C, *Recommended Practice for Fire Flow Testing*, and Annex D, *Recommended Practice for Marking of Hydrants*. These two annexes were developed based on the 2002 edition of NFPA 291.

The 2010 edition was revised in three major areas: the provisions for location and identification of fire department connections, valves controlling water supply, and protection of fire service mains entering the building.

The 2013 edition of NFPA 24 included clarifications on the requirements for running piping under buildings, including annex figures depicting clearances. The Contractors Material and Test

NFPA and National Fire Protection Association are registered trademarks of the National Fire Protection Association, Quincy, Massachusetts 02169.

Certificate for Underground Piping (Figure 10.10.1) was modified to include confirmation that the forward flow test of the backflow preventer had been conducted. A provision requiring the automatic drip valve to be located in an accessible location that permits inspections in accordance with NFPA 25 was also added.

NFPA 24 underwent a structural rewrite for the 2016 edition. The hydrant definitions were clarified to describe the type of hydrant in question, as opposed to describing when and where they would be used. The valve arrangement requirements were rewritten for clarity, and annex figures added to provide figures that are consistent with NFPA 13. The title of Chapter 6 was changed from "Valves" to "Water Supply Connections" to better describe the material covered in the chapter. Revisions to Section 6.1 more clearly call out the permitted exceptions to indicating valves and permit nonlisted tapping sleeve and valve assemblies in connections to municipal water supplies. The center of hose outlet measurements was updated to include clear minimum and maximum values for the location of the outlet, along with the appropriate measurement for a hose house installation. The steel underground piping references have been removed from the table in Chapter 10 because steel pipe is required to be listed other than in the FDC line. A statement also was added to allow underground fittings to be used above ground to transition to aboveground piping.

The 2019 edition includes minor changes related to trenching and backfill. Acceptance testing requirements for aboveground piping have been included. The standard has also been revised to clarify the unacceptable use of steel piping for underground service.

Correlating Committee on Automatic Sprinkler Systems

Kenneth W. Linder, *Chair*
Swiss Re, CT [I]

Jose R. Baz, JRB Associates Group Inc., FL [M]
Rep. NFPA Latin American Section

Kerry M. Bell, UL LLC, IL [RT]

Tracey D. Bellamy, Telgian Corporation, GA [U]
Rep. The Home Depot

Scott T. Franson, The Viking Corporation, MI [M]

Michael J. Friedman, Friedman Consulting, Inc., MD [SE]

Luke Hilton, Liberty Mutual Property, NC [I]

Alex Hoffman, Viking Fire Protection Inc., Canada [IM]
Rep. Canadian Automatic Sprinkler Association

Mark Hopkins, National Fire Sprinkler Association, MD [M]
Rep. National Fire Sprinkler Association

Roland J. Huggins, American Fire Sprinkler Association, Inc., TX [IM]

Sultan M. Javeri, SC Engineering, France [IM]

Charles W. Ketner, National Automatic Sprinkler Fitters LU 669, MD [L]
Rep. United Assn. of Journeymen & Apprentices of the Plumbing & Pipe Fitting Industry

John A. LeBlanc, FM Global, MA [I]

David O. Lowrey, City of Boulder Fire Rescue, CO [E]

Brock Mitchell, Extended Stay Hotels, NC [U]

Garner A. Palenske, Jensen Hughes/AON Fire Protection Engineering, CA [SE]
Rep. JENSEN HUGHES

Adam Seghi, Coda Risk Analysis, TX [I]

Douglas Paul Stultz, U.S. Department of the Navy, VA [E]

J. Michael Thompson, GHD/The Protection Engineering Group, PC, VA [SE]

Alternates

Roland A. Asp, National Fire Sprinkler Association, Inc., MD [M]
(Alt. to Mark Hopkins)

Ralph E. Bless, Jr., Telgian Corporation, GA [U]
(Alt. to Tracey D. Bellamy)

James P. Carroll, Liberty Mutual Insurance, FL [I]
(Alt. to Luke Hilton)

Bruce H. Clarke, American International Group, Inc. (AIG), NC [I]
(Alt. to Adam Seghi)

Russell P. Fleming, Northeast Fire Suppression Associates, LLC, NH [SE]
(Alt. to Michael J. Friedman)

David B. Fuller, FM Approvals, RI [I]
(Alt. to John A. LeBlanc)

Jeffrey E. Harper, JENSEN HUGHES, IL [SE]
(Alt. to Garner A. Palenske)

Jeff Hebenstreit, UL LLC, IL [RT]
(Alt. to Kerry M. Bell)

Scott T. Martorano, The Viking Corporation, MI [M]
(Alt. to Scott T. Franson)

Jack A. Medovich, Fire & Life Safety America, MD [IM]
(Alt. to Roland J. Huggins)

John G. O'Neill, GHD/The Protection Engineering Group, PC, VA [SE]
(Alt. to J. Michael Thompson)

Lawrence Richard Phillips, U.S. Department of the Navy, VA [E]
(Alt. to Douglas Paul Stultz)

Donato A. Pirro, Electro Sistemas De Panama, S.A., Panama [M]
(Alt. to Jose R. Baz)

Jason W. Ryckman, Canadian Automatic Sprinkler Association, Canada [IM]
(Alt. to Alex Hoffman)

Joseph Su, National Research Council of Canada, Canada [RT]
(Voting Alt.)

Nonvoting

James B. Biggins, TUV SUD America Inc./Global Risk Consultants Corporation, IL [SE]
Rep. TC on Hanging & Bracing of Water-Based Systems

Robert G. Caputo, Fire & Life Safety America, AZ [M]
Rep. TC on Foam-Water Sprinklers

Raymond A. Grill, Arup, DC [SE]
Rep. TC on Sprinkler System Installation Criteria

Kenneth E. Isman, University of Maryland, MD [SE]
Rep. TC on Residential Sprinkler Systems

William E. Koffel, Koffel Associates, Inc., MD [SE]
Rep. Safety to Life Correlating Committee

Russell B. Leavitt, Telgian Corporation, AZ [U]
Rep. TC on Sprinkler System Discharge Criteria

Kenneth W. Wagoner, Parsley Consulting Engineers, CA [SE]
Rep. TC on Private Water Supply Piping Systems

John J. Walsh, UA Joint Apprenticeship Committee Local 669, MD [SE]
Rep. United Assn. of Journeymen & Apprentices of the Plumbing & Pipe Fitting Industry
(Member Emeritus)

David R. Hague, NFPA Staff Liaison

Chad Duffy, NFPA Co-Staff Liaison

This list represents the membership at the time the Committee was balloted on the final text of this edition. Since that time, changes in the membership may have occurred. A key to classifications is found at the back of the document.

NOTE: Membership on a committee shall not in and of itself constitute an endorsement of the Association or any document developed by the committee on which the member serves.

Committee Scope: This Committee shall have overall responsibility for documents that pertain to the criteria for the design and installation of automatic, open and foam-water sprinkler systems including the character and adequacy of water supplies, and the selection of sprinklers, piping, valves, and all materials and accessories. This Committee does not cover the installation of tanks and towers, nor the installation, maintenance, and use of central station, proprietary, auxiliary, and local signaling systems for watchmen, fire alarm, supervisory service, nor the design of fire department hose connections.

Technical Committee on Private Water Supply Piping Systems

Kenneth W. Wagoner, *Chair*
Parsley Consulting Engineers, CA [SE]

Roland A. Asp, National Fire Sprinkler Association, Inc., MD [M]
Rep. National Fire Sprinkler Association

James B. Biggins, TUV SUD America Inc./Global Risk Consultants Corporation, IL [SE]

James A. Charrette, Allan Automatic Sprinkler of So. California, CA [IM]
Rep. National Fire Sprinkler Association

Flora F. Chen, Hayward Fire Department, California, CA [E]

Stephen A. Clark, Jr., Allianz Risk Consulting, LLC, VA [I]

Jeffry T. Dudley, National Aeronautics & Space Administration, FL [U]

Byron E. Ellis, Entergy Corporation, LA [U]
Rep. Edison Electric Institute

Brandon W. Frakes, Global Asset Protection Services, LLC, NC [I]

Robert M. Gagnon, Gagnon Engineering, MD [SE]

LaMar Hayward, 3-D Fire Protection, Inc., ID [IM]

Jeff Hebenstreit, UL LLC, IL [RT]

Kevin J. Kelly, Victaulic, PA [M]
Rep. National Fire Sprinkler Association

Alan R. Laguna, Merit Sprinkler Company, Inc., LA [IM]

John Lake, City of Gainesville, FL [E]

Michael Larsen, Amway Inc., MI [U]

James M. Maddry, James M. Maddry, P.E., GA [SE]

Donald McGriff, ISCO Industries, AL [M]

Bob D. Morgan, Fort Worth Fire Department, TX [E]

Thomas William Noble, American Fire Sprinkler Association, TX [IM]

Dale H. O'Dell, National Automatic Sprinkler Fitters LU 669, CA [L]
Rep. United Assn. of Journeymen & Apprentices of the Plumbing & Pipe Fitting Industry

Shawn C. Olson, Clackamas County Fire District #1, OR [E]

Dion Powell, Liberty Mutual, IL [I]

James R. Richardson, Lisle Woodridge Fire District, IL [E]

Daniel Sanchez, City of Los Angeles, CA [E]

James R. Schifiliti, Fire Safety Consultants, Inc., IL [IM]
Rep. Illinois Fire Prevention Association

Peter T. Schwab, Wayne Automatic Fire Sprinklers, Inc., FL [IM]

Austin L. Smith, Consolidated Nuclear Security, LLC, Y-12, TN [U]

Michael J. Spaziani, FM Global, MA [I]

Chen-Hsiang Su, JENSEN HUGHES/AON, IL [SE]
Rep. JENSEN HUGHES

Alternates

Jon R. Ackley, Dalmatian Fire, Inc., IN [M]
(Alt. to Roland A. Asp)

Marinus Both, Western States Fire Protection Company, NV [IM]
(Alt. to James A. Charrette)

Mark A. Bowman, Global Asset Protection Services, LLC, OH [I]
(Alt. to Brandon W. Frakes)

Hossein Davoodi, Duke Energy, NC [U]
(Alt. to Byron E. Ellis)

William J. Gotto, TUV SUD America Inc./Global Risk Consultants Corporation, NJ [SE]
(Alt. to James B. Biggins)

Andrew C. Higgins, Allianz Risk Consulting, LLC, NC [I]
(Alt. to Stephen A. Clark, Jr.)

Luke Hilton, Liberty Mutual Property, NC [I]
(Alt. to Dion Powell)

Larry Keeping, PLC Fire Safety Solutions, Canada [SE]
(Voting Alt.)

Charles W. Ketner, National Automatic Sprinkler Fitters LU 669, MD [L]
(Alt. to Dale H. O'Dell)

Kevin D. Maughan, Globe Fire, MI [M]
(Alt. to Kevin J. Kelly)

Michael G. McCormick, UL LLC, IL [RT]
(Alt. to Jeff Hebenstreit)

Angele Morcos, FM Global, MA [I]
(Alt. to Michael J. Spaziani)

William Overton, Consolidated Nuclear Security, LLC, Y-12, TN [U]
(Alt. to Austin L. Smith)

John H. Pecot, Tyco Simplexgrinnell, TX [M]
(Voting Alt.)

Martin Ramos, Environmental Systems Design, Inc., IL [SE]
(Voting Alt.)

Jeffrey J. Rovegno, Mr. Sprinkler Fire Protection, CA [IM]
(Alt. to Thomas William Noble)

James A. Zimmerman, JENSEN HUGHES, IL [SE]
(Alt. to Chen-Hsiang Su)

Nonvoting

Frans Alferink, Wavin Overseas, Netherlands [U]

David R. Hague, NFPA Staff Liaison

Chad Duffy, NFPA Co-Staff Liaison

This list represents the membership at the time the Committee was balloted on the final text of this edition. Since that time, changes in the membership may have occurred. A key to classifications is found at the back of the document.

NOTE: Membership on a committee shall not in and of itself constitute an endorsement of the Association or any document developed by the committee on which the member serves.

Committee Scope: This Committee shall have the primary responsibility for documents on private piping systems supplying water for fire protection and for hydrants, hose houses, and valves. The Committee is also responsible for documents on fire flow testing and marking of hydrants.

Contents

Chapter 1 Administration **24–** 8
1.1 Scope. **24–** 8
1.2 Purpose. **24–** 8
1.3 Retroactivity. **24–** 8
1.4 Equivalency. **24–** 8
1.5 Units. **24–** 8

Chapter 2 Referenced Publications **24–** 9
2.1 General. **24–** 9
2.2 NFPA Publications. **24–** 9
2.3 Other Publications. **24–** 9
2.4 References for Extracts in Mandatory Sections. ... **24–** 10

Chapter 3 Definitions **24–** 10
3.1 General. **24–** 10
3.2 NFPA Official Definitions. **24–** 10
3.3 General Definitions. **24–** 10
3.4 Hydrant Definitions. **24–** 11

Chapter 4 General Requirements **24–** 11
4.1 Plans. **24–** 11
4.2 Installation Work. **24–** 11

Chapter 5 Water Supplies **24–** 12
5.1 Connection to Waterworks Systems. **24–** 12
5.2 Size of Fire Mains. **24–** 12
5.3 Pressure-Regulating Devices and Meters. **24–** 12
5.4 Connection from Waterworks Systems. **24–** 12
5.5 Connections to Public Water Systems. **24–** 12
5.6 Pumps. **24–** 12
5.7 Tanks. **24–** 12
5.8 Penstocks, Rivers, Lakes, or Reservoirs. **24–** 12
5.9 Remote Fire Department Connections. **24–** 12

Chapter 6 Water Supply Connections **24–** 13
6.1 Valves. **24–** 13
6.2 Connections to Water Supplies. **24–** 13
6.3 Post Indicator Valves. **24–** 14
6.4 Valves in Pits. **24–** 14
6.5 Backflow Prevention Assemblies. **24–** 14
6.6 Sectional Valves. **24–** 14
6.7 Identifying and Securing Valves. **24–** 14
6.8 Check Valves. **24–** 14

Chapter 7 Hydrants **24–** 14
7.1 General. **24–** 14
7.2 Number and Location. **24–** 15
7.3 Installation. **24–** 15

Chapter 8 Hose Houses and Equipment **24–** 15
8.1 General. **24–** 15
8.2 Location. **24–** 15
8.3 Construction. **24–** 15
8.4 Size and Arrangement. **24–** 16
8.5 Marking. **24–** 16
8.6 General Equipment. **24–** 16
8.7 Domestic Service Use Prohibited. **24–** 16

Chapter 9 Master Streams **24–** 16
9.1 Master Streams. **24–** 16
9.2 Application and Special Considerations. **24–** 16

Chapter 10 Underground Requirements **24–** 16
10.1 Piping. **24–** 16
10.2 Fittings. **24–** 16
10.3 Connection of Pipe, Fittings, and Appurtenances. **24–** 16
10.4 Protection of Private Fire Service Mains. **24–** 17
10.5 Grounding and Bonding. **24–** 19
10.6 Restraint. **24–** 19
10.7 Steep Grades. **24–** 20
10.8 Installation Requirements. **24–** 20
10.9 Backfilling. **24–** 21
10.10 Testing and Acceptance. **24–** 21

Chapter 11 Hydraulic Calculations **24–** 24
11.1 Calculations in U.S. Customary Units. **24–** 24
11.2 Calculations in SI Units. **24–** 24

Chapter 12 Aboveground Pipe and Fittings **24–** 24
12.1 General. **24–** 24
12.2 Protection of Piping. **24–** 24

Chapter 13 Sizes of Aboveground and Buried Pipe **24–** 25
13.1 Private Service Mains. **24–** 25
13.2 Mains Not Supplying Hydrants. **24–** 25
13.3 Mains Supplying Fire Protection Systems. **24–** 25

Chapter 14 System Inspection, Testing, and Maintenance **24–** 25
14.1 General. **24–** 25

Annex A Explanatory Material **24–** 25

Annex B Valve Supervision Issues **24–** 41

Annex C Recommended Practice for Fire Flow Testing **24–** 42

Annex D Recommended Practice for Marking of Hydrants **24–** 52

Annex E Informational References **24–** 53

Index **24–** 55

NFPA 24

Standard for the

Installation of Private Fire Service Mains and Their Appurtenances

2019 Edition

IMPORTANT NOTE: This NFPA document is made available for use subject to important notices and legal disclaimers. These notices and disclaimers appear in all publications containing this document and may be found under the heading "Important Notices and Disclaimers Concerning NFPA Standards." They can also be viewed at www.nfpa.org/disclaimers or obtained on request from NFPA.

UPDATES, ALERTS, AND FUTURE EDITIONS: New editions of NFPA codes, standards, recommended practices, and guides (i.e., NFPA Standards) are released on scheduled revision cycles. This edition may be superseded by a later one, or it may be amended outside of its scheduled revision cycle through the issuance of Tentative Interim Amendments (TIAs). An official NFPA Standard at any point in time consists of the current edition of the document, together with all TIAs and Errata in effect. To verify that this document is the current edition or to determine if it has been amended by TIAs or Errata, please consult the National Fire Codes® Subscription Service or the "List of NFPA Codes & Standards" at www.nfpa.org/docinfo. In addition to TIAs and Errata, the document information pages also include the option to sign up for alerts for individual documents and to be involved in the development of the next edition.

NOTICE: An asterisk (*) following the number or letter designating a paragraph indicates that explanatory material on the paragraph can be found in Annex A.

A reference in brackets [ ] following a section or paragraph indicates material that has been extracted from another NFPA document. As an aid to the user, the complete title and edition of the source documents for extracts in mandatory sections of the document are given in Chapter 2 and those for extracts in informational sections are given in Annex E. Extracted text may be edited for consistency and style and may include the revision of internal paragraph references and other references as appropriate. Requests for interpretations or revisions of extracted text shall be sent to the technical committee responsible for the source document.

Information on referenced publications can be found in Chapter 2 and Annex E.

Chapter 1 Administration

1.1 Scope.

1.1.1 This standard shall cover the minimum requirements for the installation of private fire service mains and their appurtenances, which include supplying the following:

(1) Automatic sprinkler systems
(2) Open sprinkler systems
(3) Water spray fixed systems
(4) Foam systems
(5) Private hydrants
(6) Monitor nozzles or standpipe systems with reference to water supplies
(7) Hose houses

1.1.2 This standard shall apply to combined service mains intended to carry water for fire service and other uses.

1.1.3 This standard shall not apply to the following situations:

(1) Mains under the control of a water utility
(2) Mains providing fire protection and/or domestic water that are privately owned but are operated as a water utility

1.1.4 This standard shall not apply to underground mains serving sprinkler systems designed and installed in accordance with NFPA 13R that are less than 4 in. (100 mm) in nominal diameter.

1.1.5 This standard shall not apply to underground mains serving sprinkler systems designed and installed in accordance with NFPA 13D.

1.2 Purpose. The purpose of this standard shall be to provide a reasonable degree of protection for life and property from fire through installation requirements for private fire service main systems based on sound engineering principles, test data, and field experience.

1.3 Retroactivity. The provisions of this standard reflect a consensus for what is necessary to provide an acceptable degree of protection from the hazards addressed in this standard at the time the standard was issued.

1.3.1 Unless otherwise specified, the provisions of this standard shall not apply to facilities, equipment, structures, or installations that existed or were approved for construction or installation prior to the effective date of the standard. Where specified, the provisions of this standard shall be retroactive.

1.3.2 In those cases where the authority having jurisdiction (AHJ) determines that the existing situation presents an unacceptable degree of risk, the AHJ shall be permitted to apply retroactively any portions of this standard deemed appropriate.

1.3.3 The retroactive requirements of this standard shall be permitted to be modified if their application clearly would be impractical in the judgment of the AHJ and only where it is clearly evident that a reasonable degree of safety is provided.

1.4 Equivalency. Nothing in this standard is intended to prevent the use of systems, methods, or devices of equivalent or superior quality, strength, fire resistance, effectiveness, durability, and safety over those prescribed by this standard. Technical documentation shall be submitted to the AHJ to demonstrate equivalency. The system, method, or device shall be approved for the intended purpose by the AHJ.

1.5 Units.

1.5.1 Metric units of measurement in this standard shall be in accordance with the modernized metric system known as the International System of Units (SI). Liter and bar units are not part of, but are recognized by, SI and are used commonly in international fire protection. These units are shown in Table 1.5.1 with conversion factors.

1.5.2 If a value for a measurement given in this standard is followed by an equivalent value in other units, the first stated is to be regarded as the requirement. A given equivalent value might be approximate.

1.5.3 SI units have been converted by multiplying the quantity by the conversion factor and then rounding the result to the appropriate number of significant digits.

Table 1.5.1 Conversion Table for SI Units

Name of Unit	Unit Symbol	Conversion Factor
Liter	L	1 gal = 3.785 L
Liter per minute per square meter	$(L/min)/m^2$	1 gpm/ft^2 = $(40.746\ L/min)/m^2$
Cubic decimeter	dm^3	1 gal = 3.785 dm^3
Pascal	Pa	1 psi = 6894.757 Pa
Bar	bar	1 psi = 0.0689 bar
Bar	bar	1 bar = 10^5 Pa

Note: For additional conversions and information, see ASTM SI10, *Standard for Use of the International System of Units (SI): The Modern Metric System*.

Chapter 2 Referenced Publications

2.1 General. The documents or portions thereof listed in this chapter are referenced within this standard and shall be considered part of the requirements of this document.

2.2 NFPA Publications. National Fire Protection Association, 1 Batterymarch Park, Quincy, MA 02169-7471.

NFPA 13, *Standard for the Installation of Sprinkler Systems,* 2019 edition.

NFPA 13D, *Standard for the Installation of Sprinkler Systems in One- and Two-Family Dwellings and Manufactured Homes,* 2019 edition.

NFPA 13R, *Standard for the Installation of Sprinkler Systems in Low-Rise Residential Occupancies,* 2019 edition.

NFPA 20, *Standard for the Installation of Stationary Pumps for Fire Protection,* 2019 edition.

NFPA 22, *Standard for Water Tanks for Private Fire Protection,* 2018 edition.

NFPA 25, *Standard for the Inspection, Testing, and Maintenance of Water-Based Fire Protection Systems,* 2017 edition.

NFPA 780, *Standard for the Installation of Lightning Protection Systems,* 2017 edition.

NFPA 1961, *Standard on Fire Hose,* 2013 edition.

NFPA 1963, *Standard for Fire Hose Connections,* 2014 edition.

2.3 Other Publications.

2.3.1 ASME Publications. American Society of Mechanical Engineers, Two Park Avenue, New York, NY 10016-5990.

ASME B1.20.1, *Pipe Threads, General Purpose (Inch)*, 2013.

ASME B16.1, *Gray Iron Pipe Flanges and Flanged Fittings, Classes 12, 125, and 250*, 2015.

ASME B16.3, *Malleable Iron Threaded Fittings, Classes 150 and 300*, 2011.

ASME B16.4, *Gray Iron Threaded Fittings, Classes 125 and 250*, 2011.

2.3.2 ASTM Publications. ASTM International, 100 Barr Harbor Drive, P.O. Box C700, West Conshohocken, PA 19428-2959.

ASTM A53/A53M, *Standard Specification for Pipe, Steel, Black and Hot-Dipped, Zinc-Coated, Welded and Seamless*, 2012.

ASTM A135/A135M, *Standard Specification for Electric-Resistance-Welded Steel Pipe*, 2009 (reapproved 2014).

ASTM A312/312M, *Standard Specification for Seamless, Welded, and Heavily Cold Worked Austenitic Stainless Steel Pipes*, 2017.

ASTM A795/A795M, *Standard Specification for Black and Hot-Dipped Zinc-Coated (Galvanized) Welded and Seamless Steel Pipe for Fire Protection Use*, 2013.

ASTM B43, *Specification for Seamless Red Brass Pipe, Standard Sizes*, 2015.

ASTM B75/B75M, *Specification for Seamless Copper Tube*, 2011.

ASTM B88, *Specification for Seamless Copper Water Tube*, 2014.

ASTM B251, *Requirements for Wrought Seamless Copper and Copper-Alloy Tube*, 2010.

ASTM C136/136M, *Standard Test Method for Sieve Analysis of Fine and Coarse Aggregates*, 2014.

ASTM D2487, *Standard Practice for Classification of Soils for Engineering Purposes (Unified Soil Classification System)*, 2011.

ASTM SI10, *Standard for Use of the International System of Units (SI): The Modern Metric System*, 2010.

Δ **2.3.3 AWWA Publications.** American Water Works Association, 6666 West Quincy Avenue, Denver, CO 80235.

AWWA C104/A21.4, *Cement-Mortar Lining for Ductile-Iron Pipe and Fittings*, 2014.

AWWA C105/A21.5, *Polyethylene Encasement for Ductile-Iron Pipe Systems*, 2010.

AWWA C110/A21.10, *Ductile-Iron and Gray-Iron Fittings*, 2012.

AWWA C111/A21.11, *Rubber-Gasket Joints for Ductile-Iron Pressure Pipe and Fittings*, 2012.

AWWA C115/A21.15, *Flanged Ductile-Iron Pipe with Ductile-Iron or Gray-Iron Threaded Flanges*, 2011.

AWWA C150/A21.50, *Thickness Design of Ductile-Iron Pipe*, 2014.

AWWA C151/A21.51, *Ductile-Iron Pipe, Centrifugally Cast*, 2009.

AWWA C153/A21.53, *Ductile-Iron Compact Fittings*, 2011.

AWWA C300, *Reinforced Concrete Pressure Pipe, Steel-Cylinder Type*, 2011.

AWWA C301, *Prestressed Concrete Pressure Pipe, Steel-Cylinder Type*, 2014.

AWWA C302, *Reinforced Concrete Pressure Pipe, Noncylinder Type*, 2011.

AWWA C303, *Reinforced Concrete Pressure Pipe, Bar-Wrapped, Steel-Cylinder Type*, 2008.

AWWA C600, *Installation of Ductile Iron Water Mains and Their Appurtenances*, 2010.

AWWA C602, *Cement-Mortar Lining of Water Pipe Lines in Place, 4 in. (100 mm) and Larger* , 2011.

AWWA C900, *Polyvinyl Chloride (PVC) Pressure Pipe, 4 in. Through 12 in. (100 mm Through 300 mm), for Water Transmission and Distribution*, 2007, Errata, 2008.

AWWA C905, *Polyvinyl Chloride (PVC) Pressure Pipe and Fabricated Fittings, 14 in. Through 48 in. (350 mm Through 1200 mm), for Water Transmission and Distribution*, 2010, Erratum, 2013.

AWWA C906, *Polyethylene (PE) Pressure Pipe and Fittings, 4 in. (100 mm) Through 63 in. (1575 mm) for Waterworks*, 2015.

AWWA C909, *Molecularly Oriented Polyvinyl Chloride (PVCO) Pressure Pipe, 4 in. Through 24 in. (100 mm Through 600 mm), for Water, Wastewater, and Reclaimed Water Service*, 2009.

AWWA M23, *PVC Pipe — Design and Installation*, 2002.

AWWA M55, *PE Pipe — Design and Installation*, 2006.

2.3.4 Other Publications.

Merriam-Webster's Collegiate Dictionary, 11th edition, Merriam-Webster, Inc., Springfield, MA, 2003.

2.4 References for Extracts in Mandatory Sections.

NFPA 20, *Standard for the Installation of Stationary Pumps for Fire Protection,* 2019 edition.

Chapter 3 Definitions

3.1 General. The definitions contained in this chapter shall apply to the terms used in this standard. Where terms are not defined in this chapter or within another chapter, they shall be defined using their ordinarily accepted meanings within the context in which they are used. *Merriam-Webster's Collegiate Dictionary*, 11th edition, shall be the source for the ordinarily accepted meaning.

3.2 NFPA Official Definitions.

3.2.1* Approved. Acceptable to the authority having jurisdiction.

3.2.2* Authority Having Jurisdiction (AHJ). An organization, office, or individual responsible for enforcing the requirements of a code or standard, or for approving equipment, materials, an installation, or a procedure.

3.2.3 Labeled. Equipment or materials to which has been attached a label, symbol, or other identifying mark of an organization that is acceptable to the authority having jurisdiction and concerned with product evaluation, that maintains periodic inspection of production of labeled equipment or materials, and by whose labeling the manufacturer indicates compliance with appropriate standards or performance in a specified manner.

3.2.4* Listed. Equipment, materials, or services included in a list published by an organization that is acceptable to the authority having jurisdiction and concerned with evaluation of products or services, that maintains periodic inspection of production of listed equipment or materials or periodic evaluation of services, and whose listing states that either the equipment, material, or service meets appropriate designated standards or has been tested and found suitable for a specified purpose.

3.2.5 Shall. Indicates a mandatory requirement.

3.2.6 Should. Indicates a recommendation or that which is advised but not required.

3.2.7 Standard. An NFPA Standard, the main text of which contains only mandatory provisions using the word "shall" to indicate requirements and that is in a form generally suitable for mandatory reference by another standard or code or for adoption into law. Nonmandatory provisions are not to be considered a part of the requirements of a standard and shall be located in an appendix, annex, footnote, informational note, or other means as permitted in the NFPA Manuals of Style. When used in a generic sense, such as in the phrase "standards development process" or "standards development activities," the term "standards" includes all NFPA Standards, including Codes, Standards, Recommended Practices, and Guides.

3.3 General Definitions.

3.3.1 Appurtenance. An accessory or attachment that enables the private fire service main to perform its intended function.

3.3.2 Automatic Drain Valve (Automatic Drip or Ball Drip). A device intended to remove water using gravity from piping or valve cavities, which is required to be empty when the system is not discharging water.

3.3.3* Control Valve (Shutoff Valve). A valve controlling flow to water-based fire protection systems and devices.

3.3.4 Corrosion-Resistant Piping. Piping that has the property of being able to withstand deterioration of its surface or its properties when exposed to its environment.

3.3.5 Corrosion-Retarding Material. A lining or coating material that when applied to piping or appurtenances has the property of reducing or slowing the deterioration of the object's surface or properties when exposed to its environment.

3.3.6 Fire Department Connection. A connection through which the fire department can pump supplemental water into the sprinkler system, standpipe, or other water-based fire protection systems, thereby supplementing existing water supplies.

3.3.7 Fire Pump. A pump that is a provider of liquid flow and pressure dedicated to fire protection. [**20,** 2019]

3.3.8 Hose House. An enclosure located over or adjacent to a hydrant or other water supply designed to contain the necessary hose nozzles, hose wrenches, gaskets, and spanners to be used in fire fighting in conjunction with and to provide aid to the local fire department.

3.3.9 Hydrant Butt. The hose connection outlet of a hydrant.

3.3.10 Hydraulically Calculated Water Demand Flow Rate. The waterflow rate for a system or hose stream that has been calculated using accepted engineering practices.

3.3.11 Pressure.

3.3.11.1 ***Residual Pressure.*** The pressure that exists in the distribution system, measured at the residual hydrant at the time the flow readings are taken at the flow hydrants.

3.3.11.2 ***Static Pressure.*** The pressure that exists at a given point under normal distribution system conditions measured at the residual hydrant with no hydrants flowing.

3.3.12* Pressure-Regulating Device. A device designed for the purpose of reducing, regulating, controlling, or restricting water pressure.

3.3.13* Private Fire Service Main. A private fire service main, as used in this standard, is that pipe and its appurtenances on private property that is between a source of water and the base of the system riser for water-based fire protection systems; between a source of water and inlets to foam-making systems; between a source of water and the base elbow of private hydrants or monitor nozzles; and used as fire pump suction and discharge piping, beginning at the inlet side of the check valve on a gravity or pressure tank.

3.3.14 Pumper Outlet. The hydrant outlet intended to be connected to a fire department pumper for use in taking supply from the hydrant.

3.3.15 Rated Capacity. The flow, either measured or calculated, that is available from a hydrant at the designated residual pressure (rated pressure).

3.3.16 Test.

3.3.16.1 ***Flow Test.*** A test performed by the flow and measurement of water from one hydrant and the static and residual pressures from an adjacent hydrant for the purpose of determining the available water supply at that location.

3.3.16.2 ***Flushing Test.*** A test of a piping system using flowrates indented to remove debris from the piping system prior to it being placed in service.

3.3.16.3 ***Hydrostatic Test.*** A test of a closed piping system and its attached appurtenances consisting of subjecting the piping to an increased internal pressure for a specified duration to verify system integrity and system leakage rates.

3.3.17 Valve.

3.3.17.1 ***Check Valve.*** A valve that allows flow in one direction only.

3.3.17.2* ***Indicating Valve.*** A valve that has components that provide the valve operating condition, open or closed.

3.4 Hydrant Definitions.

3.4.1 Hydrant. An exterior valved connection to a water supply system that provides hose connections.

3.4.1.1* ***Dry Barrel Hydrant (Frostproof Hydrant).*** A type of hydrant with the main control valve below the frost line between the footpiece and the barrel.

3.4.1.2 ***Flow Hydrant.*** The hydrant that is used for the flow and flow measurement of water during a flow test.

3.4.1.3* ***Private Fire Hydrant.*** A valved connection on a water supply system having one or more outlets that is used to supply hose and fire department pumpers with water on private property.

3.4.1.4 ***Public Hydrant.*** A valved connection on a water supply system having one or more outlets that is used to supply hose and fire department pumpers with water.

3.4.1.5 ***Residual Hydrant.*** The hydrant that is used for measuring static and residual pressures during a flow test.

3.4.1.6 ***Wet Barrel Hydrant.*** A type of hydrant that is intended for use where there is no danger of freezing weather and where each outlet is provided with a valve and an outlet.

Chapter 4 General Requirements

4.1* Plans.

4.1.1 Working plans shall be submitted for approval to the authority having jurisdiction before any equipment is installed or remodeled.

4.1.2 Deviation from approved plans shall require permission of the authority having jurisdiction.

4.1.3 Working plans shall be drawn to an indicated scale on sheets of uniform size, with a plan of each floor as applicable, and shall include the following items that pertain to the design of the system:

(1) Name of owner
(2) Location, including street address
(3) Point of compass
(4) A graphic representation of the scale used on all plans
(5) Name and address of contractor
(6) Size and location of all water supplies
(7) Size and location of standpipe risers, hose outlets, hand hose, monitor nozzles, and related equipment
(8) The following items that pertain to private fire service mains:
  (a) Size
  (b) Length
  (c) Location
  (d) Weight
  (e) Material
  (f) Point of connection to city main
  (g) Sizes, types, and locations of valves, valve indicators, regulators, meters, and valve pits
  (h) Depth at which the top of the pipe is laid below grade
  (i) Method of restraint
(9) The following items that pertain to hydrants:
  (a) Size and location, including size and number of outlets and whether outlets are to be equipped with independent gate valves
  (b) Thread size and coupling adapter specifications if different from NFPA 1963
  (c) Whether hose houses and equipment are to be provided, and by whom
  (d) Static and residual hydrants used in flow
  (e) Method of restraint
(10) Size, location, and piping arrangement of fire department connections

4.1.4 The working plan submittal shall include the manufacturer's installation instructions for any specially listed equipment, including descriptions, applications, and limitations for any devices, piping, or fittings.

4.2 Installation Work.

4.2.1 Installation work shall be performed by fully experienced and responsible persons.

4.2.2 The authority having jurisdiction shall always be consulted before the installation or remodeling of private fire service mains.

Chapter 5 Water Supplies

5.1* Connection to Waterworks Systems.

5.1.1 A connection to a reliable waterworks system shall be an acceptable water supply source.

5.1.2* The flow rate and pressure of a public water supply shall be determined from waterflow test data or other approved method.

5.2 Size of Fire Mains.

5.2.1 Private Fire Service Mains. Hydraulic calculations shall show that the main is able to supply the total demand at the appropriate pressure.

5.2.2 Mains Not Supplying Hydrants. For mains that do not supply hydrants, pipe sizes less than 6 in. (150 mm) nominal size shall be permitted to be used subject to the following restrictions:

(1) The main shall supply only the following types of systems:
   (a) Automatic sprinkler systems
   (b) Open sprinkler systems
   (c) Water spray fixed systems
   (d) Foam systems
   (e) Standpipe systems
(2) Hydraulic calculations shall show that the main is able to supply the total demand at the appropriate pressure.
(3) Systems that are not hydraulically calculated shall have a main at least as large as the riser.

5.3 Pressure-Regulating Devices and Meters.

5.3.1 Pressure-regulating valves shall not be used.

5.3.1.1 Pressure-regulating valves shall be permitted to be used when acceptable to the AHJ.

5.3.2 Where meters are required, they shall be listed for fire protection service.

5.4* Connection from Waterworks Systems.

5.4.1 The requirements of the public health AHJ shall be determined and followed.

5.4.2 Where a backflow prevention device is installed to guard against possible cross-contamination of the public water system, it shall be listed for fire protection service.

5.4.2.1* Where a check valve or alarm check valve is permitted by the AHJ in lieu of a backflow preventer, it shall be listed for fire protection service.

5.5 Connections to Public Water Systems. Connections to public water systems shall be arranged to be isolated by one of the methods permitted in 6.2.9.

5.6* Pumps. Fire pump units installed in accordance with NFPA 20 and connected to a water supply source complying with Sections 5.5, 5.7, or 5.8 shall use an acceptable water supply source.

5.7 Tanks. Tanks shall be installed in accordance with NFPA 22.

5.8 Penstocks, Rivers, Lakes, or Reservoirs. Water supply connections from penstocks, rivers, lakes, or reservoirs shall be designed to avoid mud and sediment and shall be provided with approved, double, removable screens or approved strainers installed in an approved manner.

5.9* Remote Fire Department Connections.

5.9.1 General. Where the AHJ requires a remote fire department connection for systems requiring one by another standard, a fire department connection shall be provided as described in Section 5.9.

5.9.1.1 Fire department connections shall be permitted to be omitted where approved by the AHJ.

5.9.1.2 Fire department connections shall be of an approved type.

5.9.1.3 Fire department connections shall be equipped with approved plugs or caps that are secured and arranged for easy removal by fire departments.

5.9.1.4 Fire department connections shall be protected where subject to mechanical damage.

5.9.2 Couplings.

Δ **5.9.2.1** The fire department connection(s) shall use an NH internal threaded swivel fitting(s) with an NH standard thread(s), except as permitted by 5.9.2.3 and 5.9.2.4.

5.9.2.2 At least one of the connections shall be the 2.5 to 7.5 NH standard thread specified in NFPA 1963.

5.9.2.3 Where local fire department connections use threads that do not conform to NFPA 1963, the AHJ shall designate the thread to be used.

5.9.2.4 Nonthreaded couplings shall be permitted where required by the AHJ.

5.9.2.4.1 Nonthreaded couplings shall be listed.

5.9.3 Valves.

5.9.3.1 A listed check valve shall be installed in the piping from each fire department connection.

5.9.3.2 Control valves shall not be installed in the piping from the fire department connection to the fire service main.

5.9.3.2.1* Control valves shall be permitted in the system piping downstream of the fire department connection piping.

5.9.4 Drainage.

5.9.4.1 The pipe between the check valve and the outside hose coupling shall be equipped with an approved automatic drain valve.

5.9.4.2 The automatic drain valve shall be installed in a location that permits inspection and testing as required by NFPA 25 and reduces the likelihood of freezing.

5.9.4.2.1 The automatic drip shall be permitted to be buried where permitted by the AHJ.

5.9.4.2.2 Where the automatic drip is buried as allowed by 5.9.4.2.1, the outlet shall discharge into a bed of crushed stone or pea gravel.

5.9.4.3 An automatic drain valve is permitted to be omitted from areas where the piping is not subject to freezing.

5.9.5 Location and Signage.

5.9.5.1* Remote fire department connections shall be located at the nearest point of fire department apparatus accessibility or at a location approved by the AHJ.

5.9.5.2* Remote fire department connections shall be located and arranged so that hose lines can be attached to the inlets without interference.

5.9.5.3 Each remote fire department connection shall be designated by a sign as follows:

(1) The sign shall have raised or engraved letters at least 1 in. (25 mm) in height on a plate or fitting.
(2)* The sign shall indicate the type of system for which the connection is intended.

5.9.5.4 Where the system demand pressure exceeds 150 psi (10.3 bar), a sign located at the fire department connection shall indicate the required inlet pressure.

5.9.5.5 Where a remote fire department connection only supplies a portion(s) of the building, a sign shall be attached to indicate the portion(s) of the building supplied.

5.9.5.6 Remote fire department connections shall not be connected on the suction side of fire pumps.

5.9.5.7 Where a remote fire department connection services multiple buildings, structures, or locations, a sign shall be provided indicating the buildings, structures, or locations served.

Chapter 6 Water Supply Connections

6.1 Valves.

6.1.1 All valves controlling connections to water supplies and to supply pipes to water-based fire protection systems shall be listed indicating valves, except as permitted by 6.1.1.3 and 6.1.1.4.

6.1.1.1 A listed underground gate valve equipped with a listed indicator post shall be permitted.

6.1.1.2 A listed water control valve assembly with a position indication connected to a remote supervisory station shall be permitted.

6.1.1.3* A listed, nonindicating valve, such as an underground gate valve, including a T-wrench, shall be permitted to be installed in a roadway box when acceptable to the AHJ.

6.1.1.3.1 For new installations, where more than one nonindicating underground gate valve is installed in a water system, all underground gate valves shall be of the same opening direction.

Δ **6.1.1.4*** A new connection to a municipal water supply shall be permitted to utilize a nonlisted, nonindicating valve, including a T-wrench as part of a tapping assembly.

6.1.1.4.1 For new installations, where more than one nonindicating underground gate valve is installed in a water system, all underground gate valves shall be of the same opening direction.

6.1.2 Indicating valves shall not close in less than 5 seconds when operated at maximum possible speed from the fully open position.

6.2 Connections to Water Supplies.

6.2.1 A valve in accordance with Section 6.1 shall be installed in each pipeline from each water supply.

6.2.1.1 Control valves shall not be installed in the piping from the fire department connection to the point it connects to the fire service main.

6.2.1.2 Control valves shall be permitted in the system piping downstream of the fire department connection.

6.2.2 Where more than one water supply exists, a check valve shall be installed in each connection.

6.2.2.1 Except for the check valve installed in the fire department connection piping, all check valves shall have a control valve installed upstream and downstream of the check valve.

6.2.2.2* When water supply connections serve as one source of supply, valves shall be installed in accordance with 6.1.1 on both sides of all check valves required in 6.2.2.

6.2.3 Check valves shall not be required in a break tank where break tanks are used with automatic fire pumps.

6.2.4 In the discharge pipe from a pressure tank or a gravity tank of less than 15,000 gal (57 m^3) capacity, a control valve shall not be required to be installed on the tank side of the check valve.

6.2.5* The following requirements shall apply where a gravity tank is located on a tower in the yard:

(1) The control valve on the tank side of the check valve shall be an outside screw and yoke or a listed indicating valve.
(2) The other control valve shall be an outside screw and yoke, a listed indicating valve, or a listed valve having a post-type indicator.

6.2.6* The following requirements shall apply where a gravity tank is located on a building:

(1) Both control valves shall be outside screw and yoke or listed indicating valves.
(2) All fittings inside the building, except the drain tee and heater connections, shall be under the control of a listed valve.

6.2.7 Where a pump is located in a combustible pump house or exposed to danger from fire or falling walls, or where a tank discharges into a private fire service main fed by another supply, one of the following requirements shall be met:

(1)* The check valve in the connection shall be located in a pit.
(2) The control valve shall be of the post indicator type and located a safe distance outside buildings.

6.2.8* All control valves shall be located where accessible and free of obstructions.

6.2.9 All connections to private fire service mains for fire protection systems shall be arranged in accordance with one of the following so that they can be isolated:

(1)* A post indicator valve installed not less than 40 ft (12 m) from the building
  (a) For buildings less than 40 ft (12 m) in height, a post indicator valve shall be permitted to be installed closer than 40 ft (12 m) but at least as far from the

building as the height of the wall facing the post indicator valve.

(2) A wall post indicator valve

(3) An indicating valve in a pit, installed in accordance with Section 6.4

(4)* A backflow preventer with at least one indicating valve not less than 40 ft (12 m) from the building

(a) For buildings less than 40 ft (12 m) in height, a backflow preventer with at least one indicating valve shall be permitted to be installed closer than 40 ft (12 m) but at least as far from the building as the height of the wall facing the backflow preventer.

(5)* A nonindicating valve, such as an underground gate valve with an approved roadway box, complete with T-wrench, located not less than 40 ft (12 m) from the building

(a) For buildings less than 40 ft (12 m) in height, a nonindicating valve, such as an underground gate valve with an approved roadway box, complete with T-wrench, shall be permitted to be installed closer than 40 ft (12 m) but at least as far from the building as the height of the wall facing the nonindicating valve.

(6) Control valves installed in a fire-rated room accessible from the exterior

(7) Control valves in a fire-rated stair enclosure accessible from the exterior as permitted by the AHJ

6.3 Post Indicator Valves.

6.3.1 Where post indicator valves are used, they shall be set so that the top of each post is 32 in. to 40 in. (800 mm to 1000 mm) above the final grade.

6.3.2 Where post indicator valves are used, they shall be protected against mechanical damage where needed.

6.4 Valves in Pits.

6.4.1 Valve pits located at or near the base of the riser of an elevated tank shall be designed in accordance with Chapter 14 of NFPA 22.

6.4.2 Where used, valve pits shall be of adequate size and accessible for inspection, operation, testing, maintenance, and removal of equipment contained therein.

6.4.3 Valve pits shall be constructed and arranged properly to protect the installed equipment from movement of earth, freezing, and accumulation of water.

6.4.3.1 Depending on soil conditions and the size of the pit, valve pits shall be permitted to be constructed of any of the following materials:

(1) Poured-in-place or precast concrete, with or without reinforcement

(2) Brick

(3) Other approved materials

6.4.3.2 Where the water table is low and the soil is porous, crushed stone or gravel shall be permitted to be used for the floor of the pit.

6.4.4 The location of the valve shall be marked, and the cover of the pit shall be kept free of obstructions.

6.5 Backflow Prevention Assemblies.

6.5.1 Where used in accordance with 6.2.9(4), backflow prevention assemblies shall be installed in accordance with their installation instructions.

6.5.2 Backflow prevention assemblies shall be protected against mechanical damage and freezing where the potential exists.

6.6 Sectional Valves.

6.6.1* Sectional valves shall be provided at appropriate locations within piping sections such that the number of fire protection connections between sectional valves does not exceed six.

6.6.2 A sectional valve shall be provided at the following locations:

(1) On each bank of a river, pond, or lake where a main crosses water

(2) Outside the building foundation(s) where a main or a section of a main is installed under a building

6.7 Identifying and Securing Valves.

6.7.1 Identification signs shall be provided at each valve to indicate the valve's function and the part of the system the valve controls.

6.7.1.1 Identification signs in 6.7.1 shall not be required for underground gate valves with roadway boxes.

6.7.2* Control valves shall be supervised by one of the following methods:

(1) Central station, proprietary, or remote station signaling service

(2) Local signaling service that causes the sounding of an audible signal at a constantly attended location

(3) An approved procedure to ensure that valves are locked in the correct position

(4) An approved procedure to verify that valves are located within fenced enclosures under the control of the owner, sealed in the open position, and inspected weekly

6.7.3 Supervision of underground gate valves with roadway boxes shall not be required.

6.8 Check Valves. Check valves shall be permitted to be installed in a vertical or horizontal position in accordance with their listing.

Chapter 7 Hydrants

7.1* General.

7.1.1 Hydrants shall be listed and approved.

7.1.1.1 The connection from the hydrant to the main shall not be less than 6 in. (150) (nominal).

7.1.1.2 A listed control valve shall be installed in each hydrant connection.

N **7.1.1.2.1** A valve required by 7.1.1.2 shall be permitted to be a listed, nonindicating valve, such as an underground gate valve in a roadway box.

7.1.1.2.2 Valves required by 7.1.1.2 shall be installed within 20 ft (6.1 m) of the hydrant.

7.1.1.2.2.1 Valves shall be clearly identified and kept free of obstructions.

7.1.1.2.3 Where valves cannot be located in accordance with 7.1.1.2.2, valve locations shall be permitted where approved by the AHJ.

7.1.1.3* The number, size, and arrangement of outlets; the size of the main valve opening; and the size of the barrel shall be suitable for the protection to be provided and shall be approved by the AHJ.

7.1.1.4 Independent gate valves on 2½ in. (65 mm) outlets shall be permitted.

7.1.2 Hydrant outlet threads shall have NHS external threads for the size outlet(s) supplied as specified in NFPA 1963.

7.1.3 Where local fire department connections do not conform to NFPA 1963, the AHJ shall designate the connection to be used.

7.2 Number and Location.

7.2.1* Hydrants shall be provided and spaced in accordance with the requirements of the AHJ.

7.2.2 Public hydrants shall be permitted to be recognized as meeting all or part of the requirements of Section 7.2.

7.2.3* Hydrants shall be located not less than 40 ft (12 m) from the buildings to be protected.

7.2.4 Where hydrants cannot be located in accordance with 7.2.3, hydrants located closer than 40 ft (12 m) from the building or wall hydrants shall be permitted to be used where approved by the AHJ.

7.3 Installation.

7.3.1* Hydrants shall be installed on flat stones, concrete slabs or other approved materials.

7.3.2 Small stones or an approved equivalent shall be provided about the drain.

Δ **7.3.2.1** Where soil is such that the hydrants will not drain properly with the arrangement specified in 7.3.2, or where groundwater stands at levels above that of the drain, the hydrant drain shall be plugged before installation.

7.3.2.1.1* Hydrants with drain plugs shall be marked to indicate the need for pumping out after usage.

7.3.3* The center of a hose outlet shall be not less than 18 in. (450 mm) above final grade.

7.3.3.1 The center of a hose outlet shall not be more than 36 in. (900 mm) above final grade.

7.3.3.2 The center of a hose outlet located in a hose house shall not be less than 12 in. (300 mm) above the floor.

7.3.4 Hydrants shall be restrained in accordance with the requirements of Chapter 10.

7.3.5 Hydrants shall be protected if subject to mechanical damage, in accordance with the requirements of Chapter 10.

7.3.5.1 The means of hydrant protection shall be arranged so that it does not interfere with the connection to, or operation of, hydrants.

7.3.6 The following shall not be installed in the service stub between a fire hydrant and private water supply piping:

(1) Check valves
(2) Detector check valves
(3) Backflow prevention valves
(4) Other similar appurtenances

Chapter 8 Hose Houses and Equipment

8.1 General.

8.1.1* A supply of hose and equipment shall be provided where hydrants are intended for use by plant personnel or a fire brigade.

8.1.1.1 The quantity and type of hose and equipment shall depend on the following:

(1) Number and location of hydrants relative to the protected property
(2) Extent of the hazard
(3) Fire-fighting capabilities of potential users

8.1.1.2 The AHJ shall be consulted regarding quantity and type of hose.

8.1.2 Hose shall be stored so it is accessible and is protected from the weather.

8.1.2.1 Hose shall be permitted to be stored in hose houses or by placing hose reels or hose carriers in weather-protected enclosures.

8.1.3* Hose shall conform to NFPA 1961.

8.1.4 Hose Connections.

8.1.4.1 Hose connections shall have external national hose standard (NHS) threads, for the valve size specified, in accordance with NFPA 1963.

8.1.4.2 Hose connections shall be equipped with caps to protect the hose threads.

8.1.4.3 Where local fire department hose threads do not conform to NFPA 1963, the AHJ shall designate the hose threads to be used.

8.2 Location.

8.2.1 Where hose houses are utilized, they shall be located over, or immediately adjacent to, the hydrant.

8.2.2 Hydrants within hose houses shall be as close to the front of the house as possible and still allow sufficient room behind the doors for the hose gates and the attached hose.

8.2.3 Where hose reels or hose carriers are utilized, they shall be located so that the hose can be brought into use at a hydrant.

8.3 Construction.

8.3.1 The construction shall protect the hose from weather and vermin.

8.3.2 Clearance shall be provided for operation of the hydrant wrench.

8.3.3 Ventilation shall be provided.

8.3.4 The exterior shall be painted or otherwise protected against deterioration.

8.4* Size and Arrangement. Hose houses shall be of a size and arrangement that provide shelves or racks for the hose and equipment.

8.5 Marking. Hose houses shall be plainly identified.

8.6 General Equipment.

8.6.1* Where hose houses are used in addition to the hose, each shall be equipped with the following:

(1) Two approved adjustable spray–solid stream nozzles equipped with shutoff features for each size of hose provided
(2) One hydrant wrench (in addition to wrench on hydrant)
(3) Four coupling spanners for each size hose provided
(4) Two hose coupling gaskets for each size hose

8.6.2 Where two sizes of hose and nozzles are provided, reducers or gated wyes shall be included in the hose house equipment.

8.7 Domestic Service Use Prohibited. The use of hydrants and hose for purposes other than fire-related services shall be prohibited.

Chapter 9 Master Streams

9.1* Master Streams. Master streams shall be delivered by monitor nozzles, hydrant-mounted monitor nozzles, and similar master stream equipment capable of delivering more than 250 gpm (950 lpm).

9.2 Application and Special Considerations. Master streams shall be provided as protection for the following:

(1) Large amounts of combustible materials located in yards
(2) Average amounts of combustible materials in inaccessible locations
(3) Occupancies presenting special hazards, as required by the authority having jurisdiction

Chapter 10 Underground Requirements

10.1* Piping.

10.1.1* All piping used in private fire service mains shall be in accordance with 10.1.1.1, 10.1.1.2, or 10.1.1.3.

Δ **10.1.1.1 Listing.** Piping manufactured in accordance with Table 10.1.1.1 shall be permitted to be used.

10.1.1.2 Piping specifically listed for use in private fire service mains shall be permitted to be used.

10.1.1.2.1 Where listed pipe is used, it shall be installed in accordance with the listing limitations including installation instructions.

10.1.1.2.2 Where listing limitations or installation instructions differ from the requirements of this standard, the listing limitations and installation instructions shall apply.

10.1.1.3 Steel piping manufactured in accordance with Table 10.1.1.3 that is externally coated and wrapped and internally galvanized shall be permitted to be used between the hose coupling(s) on the fire department connection and the check valve installed in the fire department connection piping.

10.1.1.3.1 External coating and wrapping as required by 10.1.1.3 shall be approved.

10.1.2* All piping used in private fire service mains shall be rated for the maximum system working pressure to which the piping is exposed to but shall not be rated at less than 150 psi (10.3 bar).

10.1.3* When lined piping is used, the manufacturer's literature for internal diameter shall be used for all hydraulic calculations.

10.1.4* Underground piping shall be permitted to extend into the building through the slab or wall not more than 24 in. (600 mm).

•

10.2 Fittings.

10.2.1 All fittings used in private fire service mains shall be in accordance with 10.2.1.1 or 10.2.1.2.

Δ **10.2.1.1** Fittings manufactured in accordance with Table 10.2.1.1 shall be permitted to be used.

10.2.1.2 Special Listed Fittings. Fittings specifically listed for use in private fire service mains shall be permitted to be used.

10.2.1.2.1 Where listed fittings are used, they shall be installed in accordance with their listing limitations including installation instructions.

10.2.1.2.2 Where listing limitations or installation instructions differ from the requirements of this standard, the listing limitations and installation instructions shall apply.

10.2.2 All fittings used in private fire service mains shall be rated for the maximum system working pressure to which the fittings are exposed, but shall not be rated at less than 150 psi (10.3 bar).

10.2.3 Where fittings installed in a private fire service main must be installed above grade, the fittings shall conform to NFPA 13.

10.2.3.1 Fittings in accordance with 10.2.1 shall be permitted for the transition to the above ground piping or fittings.

10.3 Connection of Pipe, Fittings, and Appurtenances.

10.3.1* Connection of all fittings and appurtenances to piping shall be in accordance with Section 10.3.

10.3.2 Connections of pipe and fittings indicated in Table 10.1.1.1 and Table 10.2.1.1 shall be in accordance with the referenced standard in the table.

10.3.3 Listed Connections. Connections utilizing listed products shall be in accordance with the listing limitations and the manufacturer's installation instructions.

10.3.3.1 Where listing limitations or installation instructions differ from the requirements of this standard, the listing limitations and installation instructions shall apply.

Δ **Table 10.1.1.1 Manufacturing Standards for Underground Pipe**

Materials and Dimensions	Standard
Ductile Iron	
Cement-Mortar Lining for Ductile-Iron Pipe and Fittings	AWWA C104/A21.4
Polyethylene Encasement for Ductile-Iron Pipe Systems	AWWA C105/A21.5
Rubber-Gasket Joints for Ductile-Iron Pressure Pipe and Fittings	AWWA C111/A21.11
Flanged Ductile-Iron Pipe with Ductile-Iron or Gray-Iron Threaded Flanges	AWWA C115/A21.15
Thickness Design of Ductile-Iron Pipe	AWWA C150/A21.50
Ductile-Iron Pipe, Centrifugally Cast	AWWA C151/A21.51
Standard for the Installation of Ductile Iron Water Mains and Their Appurtenances	AWWA C600
Concrete	
Reinforced Concrete Pressure Pipe, Steel-Cylinder Type	AWWA C300
Prestressed Concrete Pressure Pipe, Steel-Cylinder Type	AWWA C301
Reinforced Concrete Pressure Pipe, Non-Cylinder Type	AWWA C302
Reinforced Concrete Pressure Pipe, Steel-Cylinder Type, Pretensioned	AWWA C303
Cement-Mortar Lining of Water Pipe Lines in Place, 4 in. (100 mm) and Larger	AWWA C602
Plastic	
Polyvinyl Chloride (PVC) Pressure Pipe, 4 in. Through 12 in. (100 mm Through 300 mm), for Water Transmission and Distribution	AWWA C900
Polyvinyl Chloride (PVC) Pressure Pipe and Fabricated Fittings, 14 in. Through 48 in. (350 mm Through 1200 mm), for Water Transmission and Distribution	AWWA C905
Polyethylene (PE) Pressure Pipe and Fittings, 4 in. (100 mm) Through 63 in. (1575 mm) for Waterworks	AWWA C906
Molecularly Oriented Polyvinyl Chloride (PVCO), 4 in. Through 24 in. (100 mm Through 600 mm) for Water, Wastewater, and Reclaimed Water Service	AWWA C909
Brass	
Specification for Seamless Red Brass Pipe, Standard Sizes	ASTM B43
Copper	
Specification for Seamless Copper Tube	ASTM B75/B75M
Specification for Seamless Copper Water Tube	ASTM B88
Requirements for Wrought Seamless Copper and Copper-Alloy Tube	ASTM B251
Stainless Steel	
Standard Specification for Seamless, Welded, and Heavily Cold Worked Austenitic Stainless Steel Pipes	ASTM A312/312M

Δ **10.3.4 Threaded Pipe and Fittings.** Where pipe, fittings, or appurtenances are connected using threads, all threads shall be in accordance with ASME B1.20.1, *Pipe Threads, General Purpose (Inch)*.

10.3.5 Grooved Connections. Where pipe, fittings, or appurtenances are connected using grooves, they shall be connected in accordance with 10.3.5.1 through 10.3.5.3.

10.3.5.1 Pipe, fittings, and appurtenances to be joined with grooved couplings shall contain cut, rolled, or cast grooves that are dimensionally compatible with the couplings.

10.3.5.2 Pipe, fittings, and appurtenances that are connected with grooved couplings and are part of a listed assembly shall be permitted to be used.

10.3.5.3* Pipe joined with grooved fittings shall be joined by a listed combination of fittings, gaskets, and grooves.

10.3.6 Copper Tube. All joints for the connection of copper tube shall be brazed or joined using pressure fittings as specified in Table 10.2.1.1.

10.4 Protection of Private Fire Service Mains.

10.4.1 Protection from Corrosion.

10.4.1.1 Coatings. All bolted joint accessories shall be cleaned and thoroughly coated with asphalt or other corrosion-retarding material after installation.

Table 10.1.1.3 Steel Piping for Fire Department Connections

Materials and Dimensions	Standard
Standard Specification for Black and Hot-Dipped Zinc-Coated (Galvanized) Welded and Seamless Steel Pipe for Fire Protection Use	ASTM A795/A795M
Standard Specification for Pipe, Steel, Black and Hot-Dipped, Zinc-Coated, Welded and Seamless	ASTM A53/A53M
Standard Specification for Electric-Resistance-Welded Steel Pipe	ASTM A135/A135M

10.4.1.2 The requirements of 10.3.5.3 shall not apply to epoxy-coated fittings, valves, glands, or other accessories.

10.4.1.3* Where it is necessary to join metal pipe with pipe of dissimilar metal, the joint shall be insulated against the passage of an electric current using an approved method.

10.4.2* Protection of Piping.

10.4.2.1 Protection from Freezing. The depth of cover for private fire service mains and their appurtenances to protect against freezing shall be in accordance with 10.4.2.

Δ **Table 10.2.1.1 Fittings Materials and Dimensions**

Materials and Dimensions	Standard
Cast Iron	
Gray Iron Threaded Fittings, Classes 125 and 250	ASME B16.4
Gray Iron Pipe Flanges and Flanged Fittings, Classes 25, 125, and 250	ASME B16.1
Ductile Iron	
Ductile-Iron and Gray-Iron Fittings	AWWA C110/A21.10
Ductile-Iron Compact Fittings	AWWA C153/A21.53
Malleable Iron	
Malleable Iron Threaded Fittings, Classes 150 and 300	ASME B16.3

10.4.2.1.1* The top of the pipe shall be buried not less than 12 in. (300 mm) below the frost line for the locality.

10.4.2.1.2 The depth of piping shall be measured from the top of the piping to the final grade.

10.4.2.1.3 Where listed piping is used and the bury depth differs from this standard, the listing limitations shall apply.

10.4.2.1.4 Where private fire service mains are installed above ground, they shall be protected from freezing in accordance with NFPA 13.

10.4.2.1.5 Private fire service mains installed in water raceways or shallow streams shall be installed so that the piping will remain in the running water throughout the year.

10.4.2.1.6 Where piping is installed adjacent to a vertical face, it shall be installed from the vertical face at the same distance as if the piping were buried.

10.4.2.1.7 Protection of private fire service mains from freezing using heat tracing shall be permitted when the heat tracing is specifically listed for underground use.

10.4.2.1.7.1 Heat tracing not listed for underground use shall be permitted when piping is installed in accordance with 10.1.4.

10.4.2.2 Protection from Mechanical Damage. The depth of cover for private fire service mains and their appurtenances to protect against mechanical damage shall be in accordance with 10.4.2.2.

10.4.2.2.1 The depth of piping shall be measured from the top of the piping to the final grade.

10.4.2.2.2 In locations where freezing is not a factor, the depth of cover shall not be less than 30 in. (750 mm) below grade to prevent mechanical damage.

10.4.2.2.2.1 Where listed piping is used and the bury depth differs from this standard, the listing limitations shall apply.

10.4.2.2.3 Private fire service mains installed under driveways or roadways shall be buried at a minimum depth of 36 in. (900 mm).

10.4.2.2.3.1 Sidewalks, walkways, and other paved or concrete pedestrian passageways shall not be required to comply with 10.4.2.2.3.

10.4.2.2.4 Private fire service mains installed under railroad tracks shall be buried at a minimum depth of 4 ft (1.2 m).

10.4.2.2.4.1 Where railroad operators require a greater depth of bury, the greater depth shall apply.

10.4.2.2.5 Private fire service mains installed under large piles of heavy commodities or subject to heavy shock and vibrations shall be buried at a minimum depth of 4 ft (1.2 m).

•

10.4.3 Private Fire Service Mains Under Buildings. Except as allowed by 10.4.3, private fire service mains shall not be allowed to run under buildings.

10.4.3.1* Private fire service mains supplying fire protection systems within the building shall be permitted to extend no more than 10 ft (3.0 m), as measured from the outside of the building, under the building to the riser location.

10.4.3.1.1* Pipe joints shall not be located directly under foundation footings.

10.4.3.1.2* Piping shall be installed a minimum of 12 in. (300 mm) below the bottom of building foundations or footers.

10.4.3.1.2.1 The requirements of 10.4.3.1.2 shall not apply when the piping is sleeved with an approved material.

Δ **10.4.3.2*** Private fire service mains shall not be permitted to extend more than 10 ft (3 m) under the building except as allowed in 10.4.3.2.1.

Δ **10.4.3.2.1** Where private fire service mains extend more than 10 ft (3 m) into the building, they shall be run in a covered trench.

N **10.4.3.2.1.1*** The trench shall be accessible from within the building.

N **10.4.3.2.1.2** The trench shall have rigid walls and a base.

N **10.4.3.2.1.3** The trench shall be constructed of noncombustible materials.

N **10.4.3.2.1.4*** Provisions for draining water shall be provided for the trench.

N **10.4.3.2.1.5** Where the piping in the trench is installed under foundations or footers, clearance shall be provided in accordance with 10.4.3.1.2 or 10.4.3.1.2.1.

10.4.3.2.2 Piping in the trench shall be permitted to be in accordance with 10.1.1.

N **10.4.3.2.2.1** Aboveground piping in accordance with NFPA 13 shall be permitted to be used.

N **10.4.3.2.2.2** Where piping installed in the trench is in accordance with 10.1.1, all joints shall be restrained in accordance with 10.6.2 or 10.6.3.

Δ **10.4.3.2.3*** Where piping is installed in a trench as permitted by 10.4.3.2.1, a valve shall be provided where the underground piping enters the trench.

10.4.3.2.4 When piping is installed in a trench, bury depths of 10.4.2.2 shall not apply.

N **10.4.3.2.4.1** Piping in the trench shall be protected from freezing in accordance with 10.4.2.1.4.

10.5 Grounding and Bonding.

10.5.1* In no case shall the underground piping be used as a grounding electrode for electrical systems.

10.5.1.1* The requirement of 10.5.1 shall not preclude the bonding of the underground piping to the lightning protection grounding system as required by NFPA 780 in those cases where lightning protection is provided for the structure.

10.6* Restraint. Private fire service mains shall be restrained against movement at changes in direction in accordance with 10.6.1, 10.6.2, or 10.6.3.

10.6.1* Thrust Blocks.

10.6.1.1 Thrust blocks shall be permitted where soil is stable and capable of resisting the anticipated thrust forces.

10.6.1.2 Thrust blocks shall be concrete of a mix not leaner than one part cement, two and one-half parts sand, and five parts stone.

10.6.1.3 Thrust blocks shall be placed between undisturbed earth and the fitting to be restrained and shall be capable of resisting the calculated thrust forces.

10.6.1.4 Wherever possible, thrust blocks shall be located so that the joints are accessible for repair.

10.6.2* Restrained Joint Systems. Private fire service mains using restrained joint systems shall include one or more of the following:

(1) Locking mechanical or push-on joints
(2) Mechanical joints utilizing setscrew retainer glands
(3) Bolted flange joints
(4) Pipe clamps and tie rods
(5) Other approved methods or devices

10.6.2.1 Sizing Clamps, Rods, Bolts, and Washers.

10.6.2.1.1 Clamps.

10.6.2.1.1.1 Clamps shall have the following dimensions:

(1) ½ in. × 2 in. (13 mm × 50 mm) for 4 in. (100 mm) to 6 in. (150 mm) pipe
(2) ⅝ in. × 2½ in. (16 mm × 65 mm) for 8 in. (200 mm) to 10 in. (250 mm) pipe
(3) ⅝ in. × 3 in. (16 mm × 75 mm) for 12 in. (300 mm) pipe

10.6.2.1.1.2 The diameter of a bolt hole shall be ⅛ in. (3 mm) larger than that of the corresponding bolt.

10.6.2.1.2 Rods.

10.6.2.1.2.1 Rods shall be not less than ⅝ in. (16 mm) in diameter.

10.6.2.1.2.2 Table 10.6.2.1.2.2 provides the numbers of various diameter rods that shall be used for a given pipe size.

10.6.2.1.2.3 Where using bolting rods, the diameter of mechanical joint bolts shall limit the diameter of rods to ¾ in. (20 mm).

10.6.2.1.2.4 Threaded sections of rods shall not be formed or bent.

10.6.2.1.2.5 Where using clamps, rods shall be used in pairs for each clamp.

10.6.2.1.2.6 Assemblies in which a restraint is made by means of two clamps canted on the barrel of the pipe shall be permitted to use one rod per clamp if approved for the specific installation by the AHJ.

10.6.2.1.2.7 Where using combinations of rods, the rods shall be symmetrically spaced.

10.6.2.1.3 Clamp Bolts. Clamp bolts shall have the following diameters:

(1) ⅝ in. (16 mm) for pipe 4 in. (100 mm), 6 in. (150 mm), and 8 in. (200 mm)
(2) ¾ in. (20 mm) for 10 in. (250 mm) pipe
(3) ⅞ in. (22 mm) for 12 in. (300 mm) pipe

10.6.2.1.4 Washers.

10.6.2.1.4.1 Washers shall be permitted to be cast iron or steel and round or square.

10.6.2.1.4.2 Cast iron washers shall have the following dimensions:

(1) ⅝ in. × 3 in. (16 mm × 75 mm) for 4 in. (100 mm), 6 in. (150 mm), 8 in. (200 mm), and 10 in. (250 mm) pipe
(2) ¾ in. × 3½ in. (20 mm × 90 mm) for 12 in. (300 mm) pipe

Δ **10.6.2.1.4.3** Steel washers shall have the following dimensions:

(1) ½ in. × 3 in. (13 mm × 75 mm) for 4 in. (100 mm), 6 in. (150 mm), 8 in. (200 mm), and 10 in. (250 mm) pipe
(2) ½ in. × 3.5 in. (13 mm × 90 mm) for 12 in. (300 mm) pipe

10.6.2.1.4.4 The diameter of holes shall be ⅛ in. (3 mm) larger than that of bolts or rods.

Δ **Table 10.6.2.1.2.2 Rod Number — Diameter Combinations**

Nominal Pipe Size (in.) (mm)	⅝ in. (16 mm)	¾ in. (19 mm)	⅞ in. (22 mm)	1 in. (25 mm)
4 (100)	2	—	—	—
6 (150)	2	—	—	—
8 (200)	3	2	—	—
10 (250)	4	3	2	—
12 (300)	6	4	3	2
14 (350)	8	5	4	3
16 (400)	10	7	5	4

Note: This table has been derived using pressure of 225 psi (15.5 bar) and design stress of 25,000 psi (172.4 MPa).

10.6.2.2 Sizes of Restraint Straps for Tees.

10.6.2.2.1 Restraint straps for tees shall have the following dimensions:

(1) ⅝ in. (16 mm) thick and 2½ in. (65 mm) wide for 4 in. (100 mm), 6 in. (150 mm), 8 in. (200 mm), and 10 in. (250 mm) pipe
(2) ⅝ in. (16 mm) thick and 3 in. (75 mm) wide for 12 in. (300 mm) pipe

10.6.2.2.2 The diameter of rod holes shall be 1/16 in. (1.6 mm) larger than that of rods.

10.6.2.2.3 Figure 10.6.2.2.3 and Table 10.6.2.2.3 shall be used in sizing the restraint straps for both mechanical and push-on joint tee fittings.

10.6.2.3 Sizes of Plug Strap for Bell End of Pipe.

10.6.2.3.1 The strap shall be ¾ in. (20 mm) thick and 2½ in. (65 mm) wide.

10.6.2.3.2 The strap length shall be the same as dimension *A* for tee straps as shown in Figure 10.6.2.2.3.

10.6.2.3.3 The distance between the centers of rod holes shall be the same as dimension *B* for tee straps as shown in Figure 10.6.2.2.3.

10.6.2.4 Material. Clamps, rods, rod couplings or turnbuckles, bolts, washers, restraint straps, and plug straps shall be of a material that has physical and chemical characteristics that indicate its deterioration under stress can be predicted with reliability.

10.6.2.5* Corrosion Resistance. After installation, rods, nuts, bolts, washers, clamps, and other restraining devices shall be cleaned and thoroughly coated with a bituminous or other acceptable corrosion-retarding material.

10.6.2.5.1 The requirements of 10.6.2.5 shall not apply to epoxy-coated fittings, valves, glands, or other accessories.

10.6.3* Private fire service mains utilizing one or more of the following connection methods shall not require additional restraint, provided that such joints can pass the hydrostatic test of 10.10.2.2 without shifting of piping:

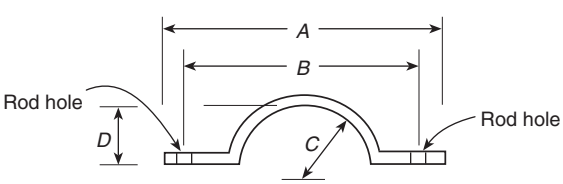

FIGURE 10.6.2.2.3 Restraint Straps for Tees.

(1) Threaded connections
(2) Grooved connections
(3) Welded connections
(4) Heat-fused connections
(5) Chemical or solvent cemented connections

10.7 Steep Grades.

10.7.1 On steep grades, mains shall be additionally restrained to prevent slipping.

10.7.1.1 Pipe shall be restrained at the bottom of a hill and at any turns (lateral or vertical).

10.7.1.1.1 The restraint specified in 10.7.1.1 shall be to natural rock or to suitable piers built on the downhill side of the bell.

10.7.1.2 Bell ends shall be installed facing uphill.

10.7.1.3 Straight runs on hills shall be restrained as determined by a design professional.

10.8 Installation Requirements.

10.8.1 Piping, valves, hydrants, gaskets, and fittings shall be inspected for damage when received and shall be inspected prior to installation.

10.8.2 The tightness of bolted joints shall be verified by the bolt torque or by the method described in the listing information or manufacturer's installation instructions.

10.8.3 Pipe, valves, hydrants, and fittings shall be clean and free from internal debris.

10.8.4 When work is stopped, the open ends of piping, valves, hydrants, and fittings shall be plugged or covered to prevent foreign materials from entering.

10.8.5 All piping, fittings, valves, and hydrants shall be examined for cracks or other defects while suspended above the trench and lowered into the trench using appropriate equipment.

10.8.6 Plain ends shall be inspected for signs of damage prior to installation.

10.8.7 Piping, fittings, valves, hydrants, and appurtenances shall not be dropped, dumped or rolled or skidded against other materials.

10.8.8 Pipes shall be supported in the trench throughout their full length and shall not be supported by the bell ends only or by blocks.

10.8.9 If the ground is soft, other means shall be provided to support the pipe.

Δ **Table 10.6.2.2.3 Restraint Straps for Tees**

Nominal Pipe Size (in.) (mm)	A		B		C		D	
	in.	mm	in.	mm	in.	mm	in.	mm
4 (100)	12½	315	10⅛	255	2½	65	1¾	45
6 (150)	14½	365	12⅛	305	3 9/16	90	2 13/16	70
8 (200)	16¾	420	14⅜	360	4 21/32	115	3 29/32	100
10 (250)	19 1/16	475	16 11/16	415	5¾	145	5	125
12 (300)	22 5/16	560	19 3/16	480	6¾	170	5⅞	145

10.8.10 Valves and fittings used with nonmetallic pipe shall be supported and restrained in accordance with the manufacturer's installation instructions.

10.9 Backfilling.

10.9.1 Backfill material shall be tamped in layers or in puddles under and around pipes to prevent settlement or lateral movement and shall contain no ashes, cinders, refuse, organic matter, or other corrosive materials.

10.9.2 Backfill material shall not contain ash, cinders, refuse, organic matter or other corrosive materials.

10.9.3* In the absence of specific guidelines or specifications, the maximum allowable particle size for backfill within 1 ft (300 mm) of the pipe shall not be larger than 1½ in. (40 mm).

N **10.9.3.1** Nominal pipe sizes of 4 in. (100 mm) or smaller shall not exceed ½ in. (13 mm) maximum particle size.

N **10.9.3.2** Nominal pipe sizes of 6 in. to 12 in. (150 mm to 300 mm) shall not exceed ¾ in. (19 mm) maximum particle size.

10.9.4 Frozen earth shall not be used as backfill material.

10.9.5 In trenches cut through rock, tamped backfill shall be used for at least 6 in. (150 mm) under and around the pipe and for at least 2 ft (600 mm) above the pipe.

10.9.6 Where using piping listed for private fire service mains, the manufacturer's installation instructions for backfill shall be followed.

10.10 Testing and Acceptance.

10.10.1 Approval of Underground Piping. The installing contractor shall be responsible for the following:

(1) Notifying the AHJ and the owner's representative of the time and date testing is to be performed
(2) Performing all required acceptance tests
(3) Completing and signing the contractor's material and test certificate(s) shown in Figure 10.10.1

10.10.2 Acceptance Requirements.

10.10.2.1* Flushing of Piping.

10.10.2.1.1 Underground piping, from the water supply to the system riser, and lead-in connections to the system riser, including all hydrants, shall be completely flushed before the connection is made to downstream fire protection system piping.

10.10.2.1.2 The flushing operation shall be continue until water flow is verified to be clear of debris.

10.10.2.1.3* The minimum rate of flow shall be in accordance with Table 10.10.2.1.3.

10.10.2.1.3.1 Where the flow rates established in Table 10.10.2.1.3 are not attainable, the maximum flow rate available to the system shall be acceptable.

10.10.2.1.4 Provision shall be made for the proper disposal of water used for flushing or testing.

10.10.2.2 Hydrostatic Test.

10.10.2.2.1* All piping and attached appurtenances subjected to system working pressure shall be hydrostatically tested at gauge pressure of 200 psi (14 bar) or 50 psi (3.4 bar) in excess of the system working pressure, whichever is greater, and shall maintain that pressure at gauge pressure of ±5 psi (.3 bar) for 2 hours.

10.10.2.2.2 Acceptable test results shall be determined by indication of either a pressure loss less than gauge pressure of 5 psi or by no visual leakage.

10.10.2.2.3 The test pressure shall be read from one of the following, located at the lowest elevation of the system or the portion of the system being tested:

(1) A gauge located at one of the hydrant outlets
(2) A gauge located at the lowest point where no hydrants are provided

10.10.2.2.4* The trench shall be backfilled between joints before testing to prevent movement of pipe.

10.10.2.2.5 Where required for safety measures presented by the hazards of open trenches, the pipe and joints shall be permitted to be backfilled, provided the installing contractor takes the responsibility for locating and correcting leakage.

10.10.2.2.6* Hydrostatic Testing Allowance. Where additional water is added to the system to maintain the test pressures required by 10.10.2.2.1, the amount of water shall be measured and shall not exceed the limits of Table 10.10.2.2.6, which are based upon the following equations:
U.S. Customary Units:

[10.10.2.2.6a]

$$L = \frac{SD\sqrt{P}}{148{,}000}$$

where:
L = testing allowance (makeup water) [gph (gal/hr)]
S = length of pipe tested (ft)
D = nominal diameter of pipe (in.)
P = average test pressure during hydrostatic test (gauge psi)
Metric Units:

[10.10.2.2.6b]

$$L = \frac{SD\sqrt{P}}{794{,}797}$$

where:
L = testing allowance (makeup water) (L/hr)
S = length of pipe tested (m)
D = nominal diameter of pipe (mm)
P = average test pressure during hydrostatic test (kPa)

Δ **10.10.2.3* Other Means of Hydrostatic Tests.** Where acceptable to the AHJ, hydrostatic tests shall be permitted to be completed in accordance with the guidelines provided in AWWA C600, *Installation of Ductile-Iron Mains and Their Appurtenances*, AWWA M9, *Concrete Pressure Pipe*, AWWA M23, *PVC Pipe — Design and Installation*, or AWWA M55, *PE Pipe — Design and Installation*, as long as the test pressure and test duration requirements of 10.10.2.2.1 are still employed.

10.10.2.4 Operating Test.

10.10.2.4.1 Each hydrant shall be fully opened and closed under system water pressure.

Contractor's Material and Test Certificate for Underground Piping

PROCEDURE

Upon completion of work, inspection and tests shall be made by the contractor's representative and witnessed by an owner's representative. All defects shall be corrected and system left in service before contractor's personnel finally leave the job.

A certificate shall be filled out and signed by both representatives. Copies shall be prepared for approving authorities, owners, and contractor. It is understood the owner's representative's signature in no way prejudices any claim against contractor for faulty material, poor workmanship, or failure to comply with approving authority's requirements or local ordinances.

Property name	Date
Property address	

Plans	Accepted by approving authorities (names)		
	Address		
	Installation conforms to accepted plans	❑ Yes	❑ No
	Equipment used is approved If no, state deviations	❑ Yes	❑ No
Instructions	Has person in charge of fire equipment been instructed as to location of control valves and care and maintenance of this new equipment? If no, explain	❑ Yes	❑ No
	Have copies of appropriate instructions and care and maintenance charts been provided to the owner or owner's representative? If no, explain	❑ Yes	❑ No
Location	Supplies buildings		
Underground pipes and joints	Pipe types and class	Type joint	
	Pipe conforms to _____ standard Fittings conform to _____ standard If no, explain	❑ Yes ❑ Yes	❑ No ❑ No
	Joints needing anchorage clamped, strapped, or blocked in accordance with _____ standard If no, explain	❑ Yes	❑ No
Test description	Flushing: Flow the required rate until water is verified to be clear of debris at outlets such as hydrants and blow-offs. Flush at one of the flow rates as specified in 10.10.2.1.3. Hydrostatic: All piping and attached appurtenances subjected to system working pressure shall be hydrostatically tested at 200 psi (13.8 bar) or 50 psi (3.4 bar) in excess of the system working pressure, whichever is greater, and shall maintain that pressure ±5 psi (0.34 bar) for 2 hours. Hydrostatic Testing Allowance: Where additional water is added to the system to maintain the test pressures required by 10.10.2.2.1, the amount of water shall be measured and shall not exceed the limits of the following equation (for metric equation, see 10.10.2.2.6): $L = \frac{SD\sqrt{P}}{148{,}000}$ L = testing allowance (makeup water), in gallons per hour (lpm) S = length of pipe tested, in feet (m) D = nominal diameter of the pipe, in inches (mm) P = average test pressure during the hydrostatic test, in pounds per square inch (gauge) (bar)		
Flushing tests	New underground piping flushed according to _____ standard by (company) If no, explain	❑ Yes	❑ No
	How flushing flow was obtained ❑ Public water ❑ Tank or reservoir ❑ Fire pump	Through what type opening ❑ Hydrant butt ❑ Open pipe	
	Lead-ins flushed according to _____ standard by (company) If no, explain	❑ Yes	❑ No
	How flushing flow was obtained ❑ Public water ❑ Tank or reservoir ❑ Fire pump	Through what type opening ❑ Y connection to flange and spigot ❑ Open pipe	

© 2018 National Fire Protection Association NFPA 24 (p. 1 of 2)

Δ **FIGURE 10.10.1 Sample of Contractor's Material and Test Certificate for Underground Piping.**

Hydrostatic test	All new underground piping hydrostatically tested at _____ psi (bar) for _____ hours		Joints covered ❑ Yes ❑ No
Leakage test	Total amount of leakage measured _____ gallons (liters) _____ hours		
	Allowable leakage _____ gallons (liters) _____ hours		
Forward flow test of backflow preventer	Forward flow test performed in accordance with 10.10.2.5.2: ❑ Yes ❑ No		
Hydrants	Number installed	Type and make	All operate satisfactorily ❑ Yes ❑ No
Control valves	Water control valves left wide open If no, state reason		❑ Yes ❑ No
	Hose threads of fire department connections and hydrants interchangeable with those of fire department answering alarm		❑ Yes ❑ No
Remarks	Date left in service		
Signatures	Name of installing contractor		
	Tests witnessed by		
	For property owner (signed)	Title	Date
	For installing contractor (signed)	Title	Date

Additional explanation and notes

© 2018 National Fire Protection Association NFPA 24 (p. 2 of 2)

Δ **FIGURE 10.10.1** ***Continued***

Δ **Table 10.10.2.1.3 Flow Required to Produce Velocity of 10 ft/sec (3.0 m/sec) in Pipes**

Nominal Pipe Size		Flow Rate	
in.	mm	gpm	L/min
2	50	100	380
2½	65	150	570
3	80	220	833
4	100	390	1500
5	125	610	2300
6	150	880	3350
8	200	1560	5900
10	250	2440	9250
12	300	3520	13,300

Δ **Table 10.10.2.2.6 Hydrostatic Testing Allowance at 200 (13.8 bar) psi (gph/100 ft of Pipe) (lph/100 m of Pipe)**

Nominal Pipe Diameter (in.) (mm)	Testing Allowance
2 (50)	0.019 (0.236)
4 (100)	0.03 (0.472)
6 (150)	0.057 (0.708)
8 (200)	0.076 (0.944)
10 (250)	0.096 (1.19)
12 (300)	0.115 (1.43)
14 (350)	0.134 (1.66)
16 (400)	0.153 (1.90)
18 (450)	0.172 (2.14)
20 (500)	0.191 (2.37)
24 (600)	0.229 (2.84)

Notes:
(1) For other length, diameters, and pressures, utilize Equation 10.10.2.2.6a or 10.10.2.2.6b to determine the appropriate testing allowance.
(2) For test sections that contain various sizes and sections of pipe, the testing allowance is the sum of the testing allowances for each size and section.

10.10.2.4.2 Dry barrel hydrants shall be checked for proper drainage.

10.10.2.4.3 All control valves shall be fully closed and opened under system water pressure to ensure proper operation.

10.10.2.4.4 Where fire pumps supply the private fire service main, the operating tests required by 10.10.2.4 shall be completed with the pumps running.

10.10.2.5 Backflow Prevention Assemblies.

10.10.2.5.1 The backflow prevention assembly shall be forward flow tested to ensure proper operation.

10.10.2.5.2 The minimum flow rate tested in 10.10.2.5.1 shall be the system demand, including hose stream demand where applicable.

Chapter 11 Hydraulic Calculations

11.1* Calculations in U.S. Customary Units. Pipe friction losses shall be determined based on the Hazen–Williams formula, as follows:

[11.1]

$$p = \frac{4.52Q^{1.85}}{C^{1.85}d^{4.87}}$$

where:
p = frictional resistance (psi/ft of pipe)
Q = flow (gpm)
C = friction loss coefficient
d = actual internal diameter of pipe (in.)

11.2 Calculations in SI Units. Pipe friction losses shall be determined based on the Hazen–Williams formula in SI units, as follows:

[11.2]

$$p_m = 6.05\left(\frac{Q_m^{1.85}}{C^{1.85}d_m^{4.87}}\right)10^5$$

where:
p_m = frictional resistance (bar/m of pipe)
Q_m = flow (L/min)
C = friction loss coefficient
d_m = actual internal diameter of pipe (mm)

Chapter 12 Aboveground Pipe and Fittings

Δ **12.1 General.** Aboveground pipe and fittings shall comply with the applicable sections of NFPA 13 that address pipe, fittings, joining methods, hangers, and installation.

12.2 Protection of Piping.

12.2.1 Aboveground piping for private fire service mains shall not pass through hazardous areas and shall be located so that it is protected from mechanical and fire damage.

12.2.2 Aboveground piping shall be permitted to be located in hazardous areas protected by an automatic sprinkler system.

12.2.3 Where aboveground water-filled supply pipes, risers, system risers, or feed mains pass through open areas, cold rooms, passageways, or other areas exposed to freezing temperatures, the pipe shall be protected against freezing by the following:

(1) Insulating coverings
(2) Frostproof casings
(3) Other reliable means capable of maintaining a minimum temperature between 40°F and 120°F (4°C and 49°C)

12.2.4 Where corrosive conditions exist or piping is exposed to the weather, corrosion-resistant types of pipe, fittings, and hangers or protective corrosion-resistant coatings shall be used.

12.2.5 To minimize or prevent pipe breakage where subject to earthquakes, aboveground pipe shall be protected in accordance with the seismic requirements of NFPA 13.

12.2.6 Mains that pass through walls, floors, and ceilings shall be provided with clearances in accordance with NFPA 13.

N **12.2.7** Aboveground private fire service mains shall be protected with bollards or other means as approved by the AHJ when subject to mechanical damage.

Chapter 13 Sizes of Aboveground and Buried Pipe

13.1 Private Service Mains. Pipe smaller than 6 in. (150 mm) in diameter shall not be installed as a private service main supplying hydrants.

13.2 Mains Not Supplying Hydrants. For mains that do not supply hydrants, sizes smaller than 6 in. (150 mm) shall be permitted to be used, subject to the following restrictions:

(1) The main shall supply only the following types of systems:
   (a) Automatic sprinkler systems
   (b) Open sprinkler systems
   (c) Water spray fixed systems
   (d) Foam systems
   (e) Standpipe systems
(2) Hydraulic calculations shall show that the main is able to supply the total demand at the appropriate pressure.
(3) Systems that are not hydraulically calculated shall have a main at least as large as the riser.

13.3 Mains Supplying Fire Protection Systems. The size of private fire service mains supplying fire protection systems shall be approved by the authority having jurisdiction, and the following factors shall be considered:

(1) Construction and occupancy of the plant
(2) Fire flow and pressure of the water required
(3) Adequacy of the water supply

Chapter 14 System Inspection, Testing, and Maintenance

14.1 General. A private fire service main and its appurtenances installed in accordance with this standard shall be properly inspected, tested, and maintained in accordance with NFPA 25 to provide at least the same level of performance and protection as designed.

Annex A Explanatory Material

Annex A is not a part of the requirements of this NFPA document but is included for informational purposes only. This annex contains explanatory material, numbered to correspond with the applicable text paragraphs.

A.3.2.1 Approved. The National Fire Protection Association does not approve, inspect, or certify any installations, procedures, equipment, or materials; nor does it approve or evaluate testing laboratories. In determining the acceptability of installations, procedures, equipment, or materials, the authority having jurisdiction may base acceptance on compliance with NFPA or other appropriate standards. In the absence of such standards, said authority may require evidence of proper installation, procedure, or use. The authority having jurisdiction may also refer to the listings or labeling practices of an organization that is concerned with product evaluations and is thus in a position to determine compliance with appropriate standards for the current production of listed items.

A.3.2.2 Authority Having Jurisdiction (AHJ). The phrase "authority having jurisdiction," or its acronym AHJ, is used in NFPA documents in a broad manner, since jurisdictions and approval agencies vary, as do their responsibilities. Where public safety is primary, the authority having jurisdiction may be a federal, state, local, or other regional department or individual such as a fire chief; fire marshal; chief of a fire prevention bureau, labor department, or health department; building official; electrical inspector; or others having statutory authority. For insurance purposes, an insurance inspection department, rating bureau, or other insurance company representative may be the authority having jurisdiction. In many circumstances, the property owner or his or her designated agent assumes the role of the authority having jurisdiction; at government installations, the commanding officer or departmental official may be the authority having jurisdiction.

A.3.2.4 Listed. The means for identifying listed equipment may vary for each organization concerned with product evaluation; some organizations do not recognize equipment as listed unless it is also labeled. The authority having jurisdiction should utilize the system employed by the listing organization to identify a listed product.

A.3.3.3 Control Valve (Shutoff Valve). Control valves do not include drain valves, check valves, or relief valves.

A.3.3.12 Pressure-Regulating Device. Examples include pressure-reducing valves, pressure-control valves, and pressure-restricting devices.

A.3.3.13 Private Fire Service Main. See Figure A.3.3.13.

A.3.3.17.2 Indicating Valve. Examples are outside screw and yoke (OS&Y) gate valves, butterfly valves, and underground gate valves with indicator posts.

A.3.4.1.1 Dry Barrel Hydrant (Frostproof Hydrant). A drain is located at the bottom of the barrel above the control valve seat for proper drainage after operation.

A.3.4.1.3 Private Fire Hydrant. Where connected to a public water system, private hydrants are supplied by a private service main that begins at the point designated by the AHJ, usually at a manually operated valve near the property line.

A.4.1 Underground mains should be designed so that the system can be extended with a minimum of expense. Possible future expansion should also be considered and the piping designed so that it is not covered by future buildings.

A.5.1 If possible, dead-end mains should be avoided by arranging for mains to be supplied from both directions. Where private fire service mains are connected to dead-end public mains, each situation should be examined to determine if it is practical to request the water utility to loop the mains to obtain a more reliable supply.

A.5.1.2 An adjustment to the waterflow test data to account for the following should be made, as appropriate:

(1) Daily and seasonal fluctuations
(2) Possible interruption by flood or ice conditions
(3) Large simultaneous industrial use
(4) Future demand on the water supply system
(5) Other conditions that could affect the water supply

Δ **A.5.4** Where connections are made from public waterworks systems, such systems should be guarded against possible contamination as follows *(see AWWA M14, Backflow Prevention*

and Cross-Connection Control Recommended Practices, local plumbing code, or consult the local water purveyor):

(1) For private fire service mains with direct connections from public waterworks mains only or with fire pumps installed in the connections from the street mains, no tanks or reservoirs, no physical connection from other water supplies, no antifreeze or other additives of any kind, and with all drains discharging to atmosphere, dry well, or other safe outlets, an approved double check valve assembly might be required by other codes or standards.

(2) For private fire service mains with direct connections from the public water supply main plus one or more elevated storage tanks or fire pumps taking suction from aboveground covered reservoirs or tanks (all storage facilities are filled or connected to public water only, and the water in the tanks is to be maintained in a potable condition), an approved double check valve assembly might be required by other codes or standards.

(3) For private fire service mains directly supplied from public mains with an auxiliary water supply, such as a pond or river on or available to the premises and dedicated to fire department use; or for systems supplied from public mains and interconnected with auxiliary supplies, such as pumps taking suction from reservoirs exposed to contamination or rivers and ponds; driven wells, mills, or other industrial water systems; or for systems or portions of systems where antifreeze or other solutions are used, an approved reduced-pressure zone-type backflow preventer might be required by other codes or standards.

(4) For private fire service mains with fire department connections located near a non-potable water source, an approved reduced-pressure zone-type backflow preventer might be required by other codes or standards.

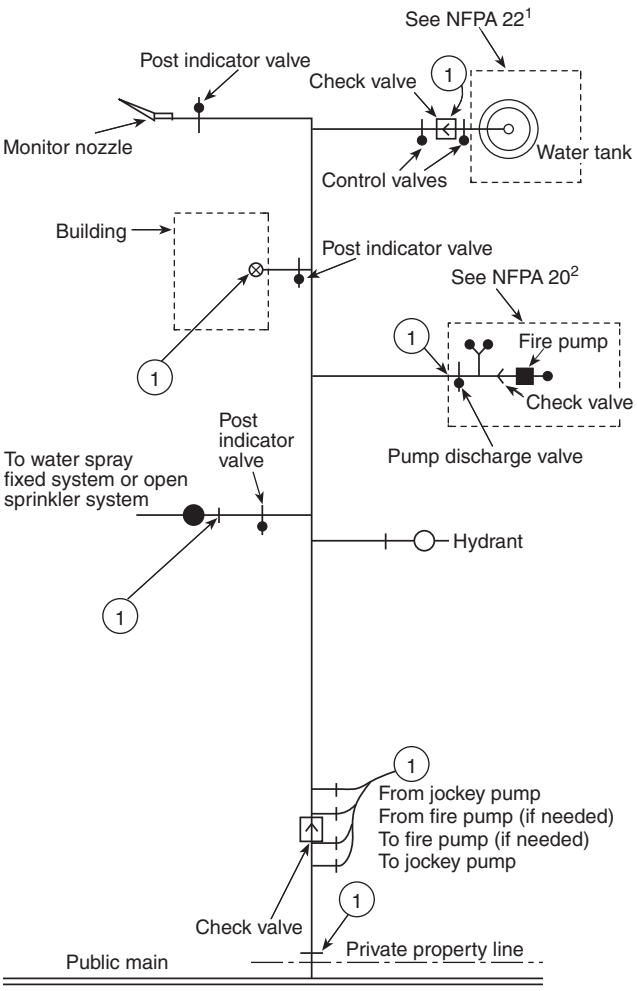

Note: The piping (aboveground or buried) shown is specific as to the end of the private fire service main, and this schematic is only for illustrative purposes beyond the end of the fire service main. Details of valves and their location requirements are covered in the specific standard involved.

1. See NFPA 22, *Standard for Water Tanks for Private Fire Protection.*
2. See NFPA 20, *Standard for the Installation of Stationary Pumps for Fire Protection.*

Δ **FIGURE A.3.3.13 Typical Private Fire Service Main.**

A.5.4.2.1 In this instance, the AHJ might be the water purveyor, plumbing inspector, or public health official.

A.5.6 A fire pump installation consisting of pump, driver, and suction supply, when of adequate capacity and reliability and properly located, makes an acceptable supply. An automatically controlled fire pump (s) taking water from a water main of adequate capacity, or taking draft under a head from a reliable storage of adequate capacity, is permitted to be, under certain conditions, accepted by the authority having jurisdiction as a single supply.

A.5.9 The fire department connection should be located not less than 18 in. (450 mm) and not more than 4 ft (1.2 m) above the level of the adjacent grade or access level. Typical fire department connections are shown in Figure A.5.9(a) and Figure A.5.9(b). Where a hydrant is not available, other water supply sources such as a natural body of water, a tank, or a reservoir should be utilized. The water authority should be consulted when a nonpotable water supply is proposed as a suction source for the fire department.

A.5.9.3.2.1 Figure A.5.9.3.2.1(a) and Figure A.5.9.3.2.1(b) depict fire department connections to the underground pipe.

A.5.9.5.1 The requirement in 5.9.5.1 applies to fire department connections attached to underground piping. If the fire department connection is attached directly to a system riser, the requirements of the appropriate installation standard apply.

A.5.9.5.2 Obstructions to fire department connections include, but are not limited to, buildings, fences, posts, landscaping, other fire department connections, fire protection equipment, gas meters, and electrical equipment.

A.5.9.5.3(2) Examples for wording of signs are:

AUTOSPKR

OPEN SPKR
STANDPIPE

STANDPIPE-SPRINKLER

DRY STANDPIPE

STANDPIPE-AUTO SPKR

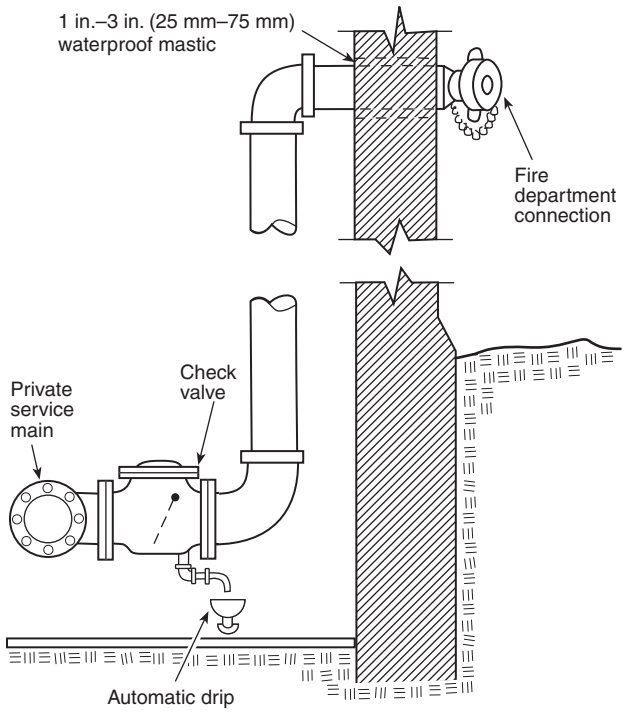

Δ **FIGURE A.5.9(a) Typical Fire Department Connection.**

A.6.1.1.3 A valve wrench with a long handle should be provided at a convenient location on the premises.

A.6.1.1.4 A connection to a municipal water supply can utilize a tapping sleeve and a nonlisted, nonindicating valve as the valve controlling the water supply.

A.6.2.2.2 See Figure A.6.2.2.2. For additional information on controlling valves, see NFPA 22.

A.6.2.5 For additional information on controlling valves, see NFPA 22.

A.6.2.6 For additional information on controlling valves, see NFPA 22.

A.6.2.7(1) Where located underground, check valves on tank or pump connections can be placed inside of buildings and at a safe distance from the tank riser or pump, except in cases where the building is entirely of one fire area. Where the building is one fire area, it is ordinarily considered satisfactory to locate the check valve overhead in the lowest level.

A.6.2.8 It might be necessary to provide valves located in pits with an indicator post extending above grade or other means so that the valve can be operated without entering the pit.

A.6.2.9(1) Distances greater than 40 ft (12 m) are not required but can be permitted regardless of the building height.

A.6.2.9(4) Distances greater than 40 ft (12 m) are not required but can be permitted regardless of the building height.

A.6.2.9(5) Distances greater than 40 ft (12 m) are not required but can be permitted regardless of the building height.

A.6.6.1 Sectional valves are necessary to allow isolation of piping sections to limit the number of fire protection connections impaired in event of a break or to make repairs or extensions to the system. Fire protection connections can consist of sprinkler system lead-ins, hydrants, or other fire protection connections.

Δ **A.6.7.2** See Annex B.

A.7.1 For information regarding identification and marking of hydrants, see Annex D.

A.7.1.1.3 The flows required for private fire protection service mains are determined by system installation standards or fire codes. The impact of the number and size of hydrant outlets on the fire protection system demand is not addressed in this standard. The appropriate code or standard should be consulted for the requirements for calculating system demand.

A.7.2.1 Fire department pumpers will normally be required to augment the pressure available from public hydrants.

A.7.2.3 Where wall hydrants are used, the AHJ should be consulted regarding the necessary water supply and arrangement of control valves at the point of supply in each individual case. *(See Figure A.7.2.3.)*

A.7.3.1 See Figure A.7.3.1(a) and Figure A.7.3.1(b).

A.7.3.2.1.1 Hydrants with the drain plugged that are subject to freezing should be pumped out after usage to prevent potential damage to and inoperability of the hydrant.

A.7.3.3 When setting hydrants, due regard should be given to the final grade line.

A.8.1.1 All hose should not be removed from a hose house for testing at the same time, since in the event of a fire the time taken to return the hose could allow a fire to spread beyond control. *(See NFPA 1962.)*

A.8.1.3 Where hose will be subjected to acids, acid fumes, or other corrosive materials, as in chemical plants, the purchase of approved rubber-covered, rubber-lined hose is advised. For hose used in plant yards containing rough surfaces that cause heavy wear or used where working pressures are above 150 psi (10 bar), double-jacketed hose should be considered.

A.8.4 Typical hose houses are shown in Figure A.8.4(a) through Figure A.8.4(c).

A.8.6.1 All hose should not be removed from a hose house for testing at the same time, since the time taken to return the hose in case of fire could allow a fire to spread beyond control. *(See NFPA 1962.)*

A.9.1 For typical master stream devices, see Figure A.9.1(a) and Figure A.9.1(b). Gear control nozzles are acceptable for use as monitor nozzles.

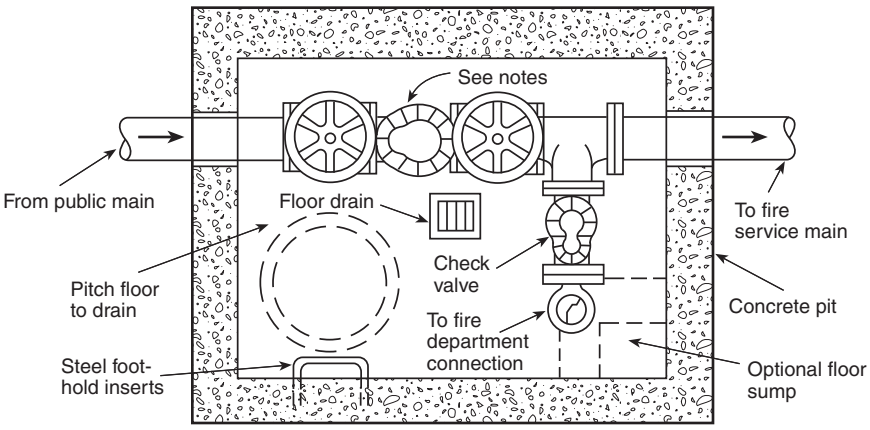

Plan (no scale)

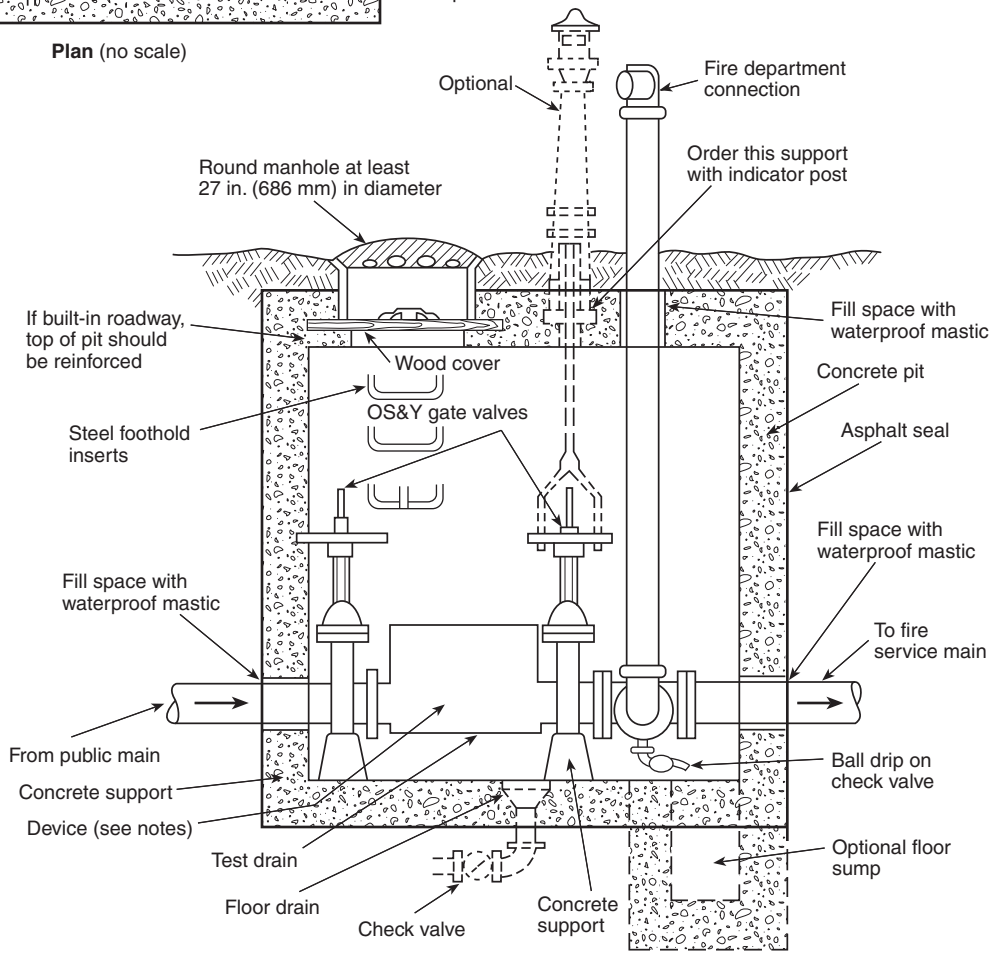

Section (no scale)

Notes:
1. Various backflow prevention regulations accept different devices at the connection between public water mains and private fire service mains.
2. The device shown in the pit could be any or a combination of the following:
   (a) Gravity check valve
   (b) Detector check valve
   (c) Double check valve assembly
   (d) Reduced-pressure zone (RPZ) device
   (e) Vacuum breaker
3. Some backflow prevention regulations prohibit these devices from being installed in a pit.
4. In all cases, the device(s) in the pit should be approved or listed as necessary. The requirements of the local or municipal water department should be reviewed prior to design or installation of the connection.
5. Pressure drop should be considered prior to the installation of any backflow prevention device.

FIGURE A.5.9(b) Typical City Water Pit — Valve Arrangement.

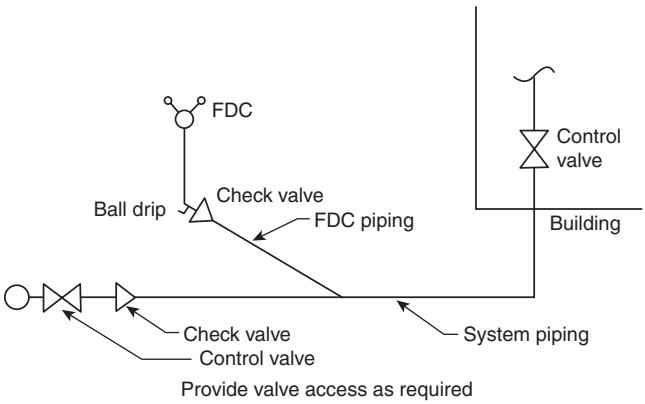

FIGURE A.5.9.3.2.1(a) Fire Department Connection Connected to Underground Piping (Sample 1). [13:Figure A.16.10.4.4(a)]

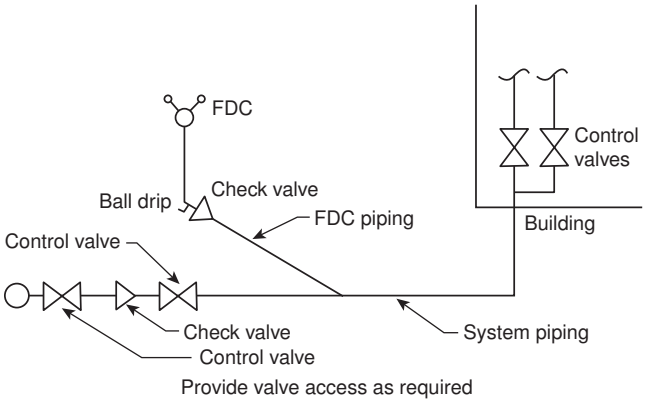

FIGURE A.5.9.3.2.1(b) Fire Department Connection Connected to Underground Piping (Sample 2). [13:Figure A.16.10.4.4(b)]

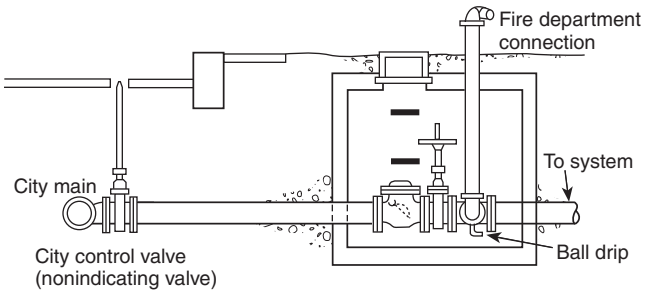

FIGURE A.6.2.2.2 Pit for Gate Valve, Check Valve, and Fire Department Connection.

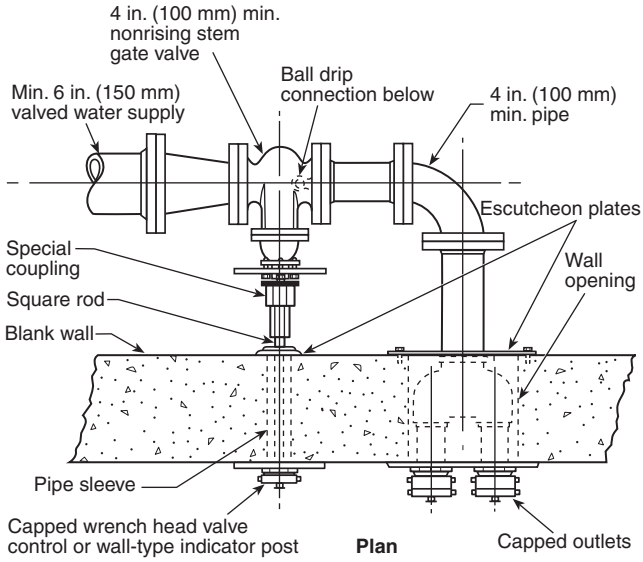

Δ FIGURE A.7.2.3 Typical Wall Fire Hydrant Installation.

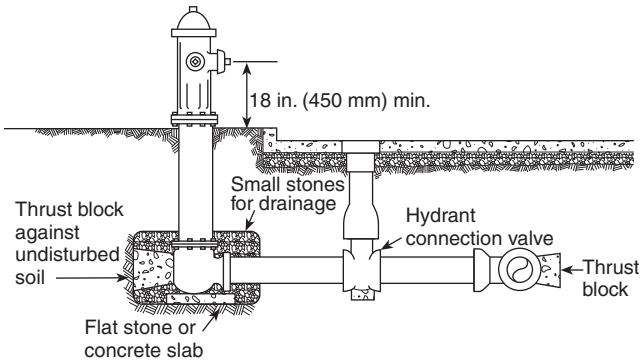

Δ FIGURE A.7.3.1(a) Typical Hydrant Connection with Minimum Height Requirement.

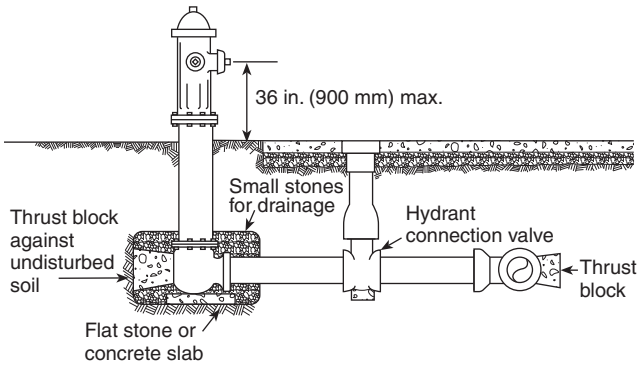

Δ FIGURE A.7.3.1(b) Typical Hydrant Connection with Maximum Height Requirement.

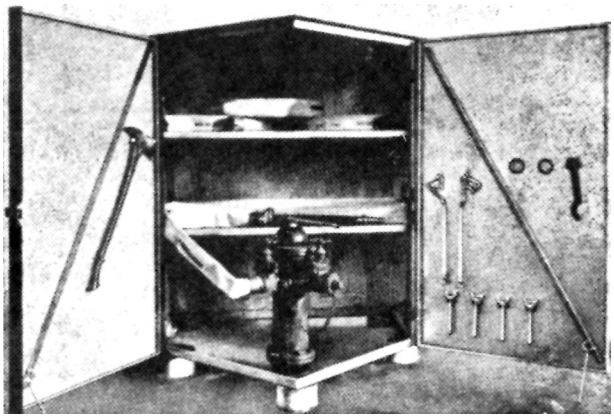

FIGURE A.8.4(a) Hose House of Five-Sided Design for Installation over Private Hydrant.

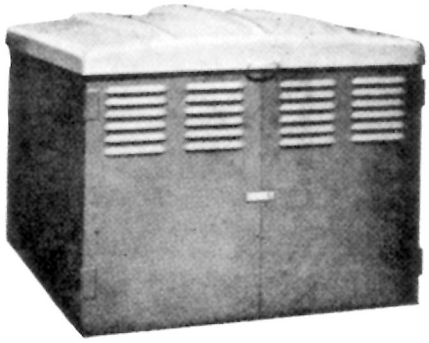

FIGURE A.8.4(b) Closed Steel Hose House of Compact Dimensions for Installation over Private Hydrant, in Which Top Lifts Up and Doors on Front Open for Complete Accessibility.

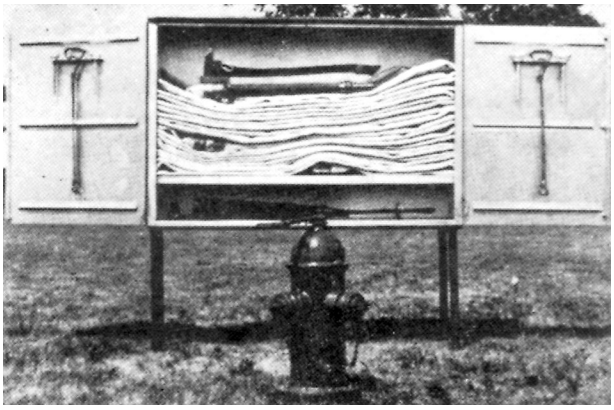

FIGURE A.8.4(c) Hose House That Can Be Installed on Legs, or Installed on Wall Near, but Not Directly Over, Private Hydrant.

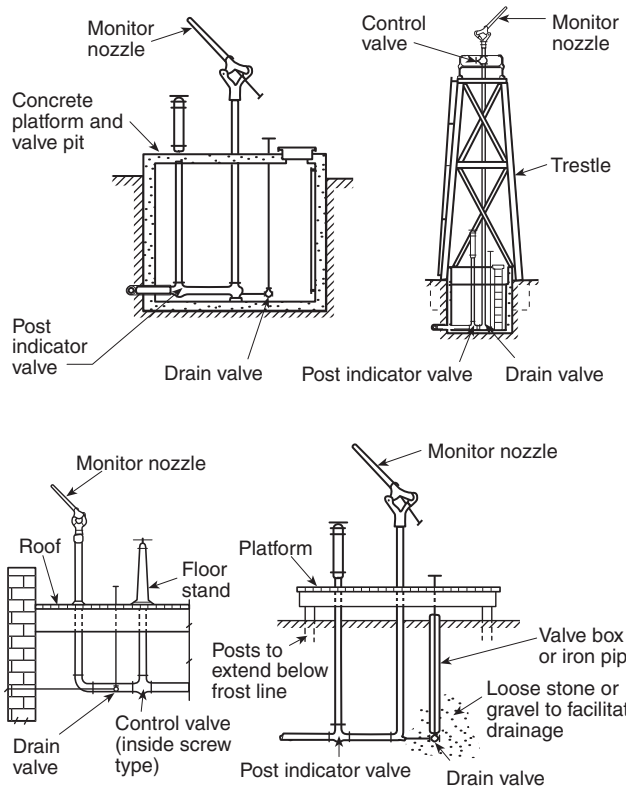

FIGURE A.9.1(a) Standard Monitor Nozzles.

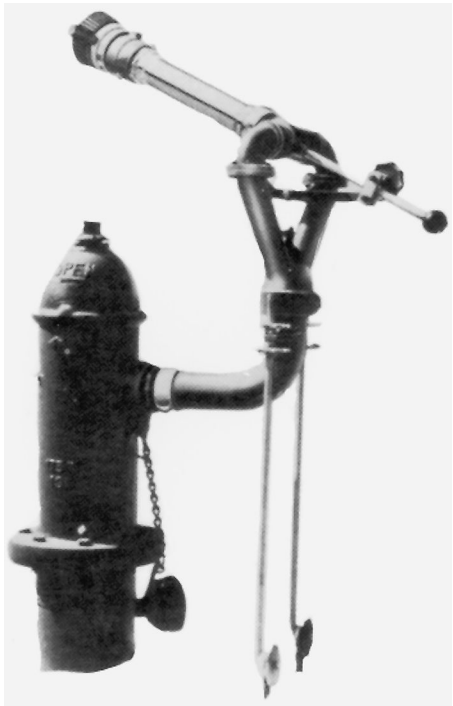

FIGURE A.9.1(b) Typical Hydrant-Mounted Monitor Nozzle.

A.10.1 Copper tubing (Type K) with brazed joints conforming to Table 10.1.1.1 and Table 10.2.1.1 is acceptable for underground service.

(1) Listing and labeling. certification organizations list or label the following:
   (a) Cast iron and ductile iron pipe (cement-lined and unlined, coated and uncoated)
   (b) Steel pipe
   (c) Copper pipe
   (d) Fiberglass filament-wound epoxy pipe and couplings
   (e) Polyethylene pipe
   (f) Polyvinyl chloride (PVC) pipe and couplings
   (g) Reinforced concrete pipe (cylinder pipe, nonprestressed and prestressed)

Δ **A.10.1.1** The type and class of pipe for a particular underground installation should be determined through consideration of the following factors:

(1) Maximum system working pressure
(2) Maximum pressure from pressure surges and anticipated frequency of surges
(3) Depth at which the pipe is to be installed
(4) Soil conditions
(5) Corrosion
(6) Susceptibility of pipe to external loads, including earth loads, installation beneath buildings, and traffic or vehicle loads

The following pipe design manuals and standards can be used as guides:

(1) AWWA C150/A21.50, *Thickness Design of Ductile-Iron Pipe*
(2) AWWA M23, *PVC Pipe—Design and Installation*
(3) AWWA M55, *PE Pipe—Design and Installation*
(4) AWWA M41, *Ductile-Iron Pipe and Fittings*
(5) *Concrete Pipe Handbook*, American Concrete Pipe Association

A.10.1.2 For underground system components, a minimum system pressure rating of 150 psi (10 bar) is specified in 10.1.2, based on satisfactory historical performance. Also, this pressure rating reflects that of the components typically used underground, such as piping, valves, and fittings. Where system pressures are expected to exceed pressures of 150 psi (10.3 bar), system components and materials manufactured and listed for higher pressures should be used. Systems that do not incorporate a fire pump or are not part of a combined standpipe system do not typically experience pressures exceeding 150 psi (10.3 bar) in underground piping. However, each system should be evaluated on an individual basis. It is not the intent of this section to include the pressures generated through fire department connections as part of the maximum working pressure.

A.10.1.3 See Table A.10.1.3.

A.10.1.4 Where nonmetallic underground piping is provided above grade or inside a building, the following should be considered:

(1) Exposure from direct rays of sunlight
(2) Compatibility with chemicals such as floor coatings and termiticides/insecticides
(3) Support of piping and appurtenances attached thereto (e.g., sprinkler risers, backflow preventers)

A.10.3.1 The following standards apply to joints used with the various types of pipe:

(1) ASME B16.1, *Gray Iron Pipe Flanges and Flanged Fittings Classes 25, 125, and 250*
(2) AWWA C111/A21.11, *Rubber-Gasket Joints for Ductile-Iron Pressure Pipe and Fittings*
(3) AWWA C115/A21.15, *Flanged Ductile-Iron Pipe with Ductile-Iron or Gray-Iron Threaded Flanges*
(4) AWWA C206, *Field Welding of Steel Water Pipe*
(5) AWWA C606, *Grooved and Shouldered Joints*

A.10.3.5.3 Fittings and couplings are listed for specific pipe materials that can be installed underground. Fittings and couplings do not necessarily indicate that they are listed specifically for underground use.

A.10.4.1.3 Gray cast iron is not considered galvanically dissimilar to ductile iron. Rubber gasket joints (unrestrained push-on or mechanical joints) are not considered connected electrically. Metal thickness should not be considered a protection against corrosive environments. In the case of cast iron or ductile iron pipe for soil evaluation and external protection systems, see Appendix A of AWWA C105/A21.5, *Polyethylene Encasement for Ductile-Iron Pipe Systems*.

A.10.4.2 As there is normally no circulation of water in private fire mains, they require greater depth of covering than do public mains. Greater depth is required in a loose gravelly soil (or in rock) than in compact soil containing large quantities of clay. The recommended depth of cover above the top of underground yard mains is shown in Figure A.10.4.2(a).

In determining the need to protect aboveground piping from freezing, the lowest mean temperature should be considered as shown in Figure A.10.4.2(b).

A.10.4.2.1.1 Consideration should be given to the type of soil and the possibility of settling. Also, many times the inspection of the piping might occur before final grading and fill of the installation is complete. The final grade should be verified.

A.10.4.3.1 Items such as sidewalks or patios should not be included as they are no different from roadways. See Figure A.10.4.3.1.

A.10.4.3.1.1 The individual piping standards should be followed for load and bury depth, accounting for the load and stresses imposed by the building foundation.

Figure A.10.4.3.1.1 shows location where pipe joints would be prohibited.

A.10.4.3.1.2 Sufficient clearance should be provided when piping passes beneath foundations or footers. See Figure A.10.4.3.1.2.

A.10.4.3.2 The design concepts in 10.4.3.2.1 through 10.4.3.2.4 should apply to both new installations and existing private fire service mains approved to remain under new buildings.

N **A.10.4.3.2.1.1** A grate or steel plate are common methods of accessing the trench.

N **A.10.4.3.2.1.4** The intent of this requirement is to prevent the piping from being exposed to standing water. Draining can be accomplished by providing a floor drain, sloping of the trench, or other approved method.

N **Table A.10.1.3 Internal Diameters (IDs) for Cement-Lined Ductile Iron Pipe**

Pipe Size in. (mm)	OD in. (mm)	Pressure Class	Thickness Class	Wall Thickness in.	Wall Thickness mm	Minimum Lining Thickness* in. (mm)	ID with Lining in.	ID with Lining mm
3 in. (80 mm)	3.96 in. (100 mm)	350	51	0.25	6	1/16 in. (1.6 mm)	3.34	84
3 in. (80 mm)	3.96 in. (100 mm)	350	52	0.28	7	1/16 in. (1.6 mm)	3.28	82
3 in. (80 mm)	3.96 in. (100 mm)	350	53	0.31	8	1/16 in. (1.6 mm)	3.22	81
3 in. (80 mm)	3.96 in. (100 mm)	350	54	0.34	9	1/16 in. (1.6 mm)	3.16	79
3 in. (80 mm)	3.96 in. (100 mm)	350	55	0.37	9	1/16 in. (1.6 mm)	3.1	78
3 in. (80 mm)	3.96 in. (100 mm)	350	56	0.4	10	1/16 in. (1.6 mm)	3.04	76
4 in. (100 mm)	4.8 in. (120 mm)	350		0.25	6	1/16 in. (1.6 mm)	4.18	105
4 in. (100 mm)	4.8 in. (120 mm)	350	51	0.26	7	1/16 in. (1.6 mm)	4.16	104
4 in. (100 mm)	4.8 in. (120 mm)	350	52	0.29	7	1/16 in. (1.6 mm)	4.1	103
4 in. (100 mm)	4.8 in. (120 mm)	350	53	0.32	8	1/16 in. (1.6 mm)	4.04	101
4 in. (100 mm)	4.8 in. (120 mm)	350	54	0.35	9	1/16 in. (1.6 mm)	3.98	100
4 in. (100 mm)	4.8 in. (120 mm)	350	55	0.38	10	1/16 in. (1.6 mm)	3.92	98
4 in. (100 mm)	4.8 in. (120 mm)	350	56	0.41	10	1/16 in. (1.6 mm)	3.86	97
6 in. (150 mm)	6.90 in. (175 mm)	350		0.25	6	1/16 in. (1.6 mm)	6.28	157
6 in. (150 mm)	6.90 in. (175 mm)	350	50	0.25	6	1/16 in. (1.6 mm)	6.28	157
6 in. (150 mm)	6.90 in. (175 mm)	350	51	0.28	7	1/16 in. (1.6 mm)	6.22	156
6 in. (150 mm)	6.90 in. (175 mm)	350	52	0.31	8	1/16 in. (1.6 mm)	6.16	154
6 in. (150 mm)	6.90 in. (175 mm)	350	53	0.34	9	1/16 in. (1.6 mm)	6.1	153
6 in. (150 mm)	6.90 in. (175 mm)	350	54	0.37	9	1/16 in. (1.6 mm)	6.04	151
6 in. (150 mm)	6.90 in. (175 mm)	350	55	0.4	10	1/16 in. (1.6 mm)	5.98	150
6 in. (150 mm)	6.90 in. (175 mm)	350	56	0.43	11	1/16 in. (1.6 mm)	5.92	148
8 in. (200 mm)	9.05 in. (225 mm)	350		0.25	6	1/16 in. (1.6 mm)	8.43	211
8 in. (200 mm)	9.05 in. (225 mm)	350	50	0.27	7	1/16 in. (1.6 mm)	8.39	210
8 in. (200 mm)	9.05 in. (225 mm)	350	51	0.3	8	1/16 in. (1.6 mm)	8.33	208
8 in. (200 mm)	9.05 in. (225 mm)	350	52	0.33	8	1/16 in. (1.6 mm)	8.27	207
8 in. (200 mm)	9.05 in. (225 mm)	350	53	0.36	9	1/16 in. (1.6 mm)	8.21	205
8 in. (200 mm)	9.05 in. (225 mm)	350	54	0.39	10	1/16 in. (1.6 mm)	8.15	204
8 in. (200 mm)	9.05 in. (225 mm)	350	55	0.42	11	1/16 in. (1.6 mm)	8.09	202
8 in. (200 mm)	9.05 in. (225 mm)	350	56	0.45	11	1/16 in. (1.6 mm)	8.03	201
10 in. (250 mm)	11.1 in. (280 mm)	350		0.26	7	1/16 in. (1.6 mm)	10.46	262
10 in. (250 mm)	11.1 in. (280 mm)	350	50	0.29	7	1/16 in. (1.6 mm)	10.4	260
10 in. (250 mm)	11.1 in. (280 mm)	350	51	0.32	8	1/16 in. (1.6 mm)	10.34	259
10 in. (250 mm)	11.1 in. (280 mm)	350	52	0.35	9	1/16 in. (1.6 mm)	10.28	257
10 in. (250 mm)	11.1 in. (280 mm)	350	53	0.38	10	1/16 in. (1.6 mm)	10.22	256
10 in. (250 mm)	11.1 in. (280 mm)	350	54	0.41	10	1/16 in. (1.6 mm)	10.16	254
10 in. (250 mm)	11.1 in. (280 mm)	350	55	0.44	11	1/16 in. (1.6 mm)	10.1	253
10 in. (250 mm)	11.1 in. (280 mm)	350	56	0.47	12	1/16 in. (1.6 mm)	10.04	251
12 in. (300 mm)	13.2 in. (330 mm)	350		0.28	7	1/16 in. (1.6 mm)	12.52	313
12 in. (300 mm)	13.2 in. (330 mm)	350	50	0.31	8	1/16 in. (1.6 mm)	12.46	312
12 in. (300 mm)	13.2 in. (330 mm)	350	51	0.34	9	1/16 in. (1.6 mm)	12.4	310
12 in. (300 mm)	13.2 in. (330 mm)	350	52	0.37	9	1/16 in. (1.6 mm)	12.34	309
12 in. (300 mm)	13.2 in. (330 mm)	350	53	0.4	10	1/16 in. (1.6 mm)	12.28	307
12 in. (300 mm)	13.2 in. (330 mm)	350	54	0.43	11	1/16 in. (1.6 mm)	12.22	306
12 in. (300 mm)	13.2 in. (330 mm)	350	55	0.46	12	1/16 in. (1.6 mm)	12.16	304
12 in. (300 mm)	13.2 in. (330 mm)	350	56	0.49	12	1/16 in. (1.6 mm)	12.1	303
14 in. (350 mm)	15.3 in. (385 mm)	250		0.28	7	3/32 in. (2 mm)	14.55	364
14 in. (350 mm)	15.3 in. (385 mm)	300		0.3	8	3/32 in. (2 mm)	14.51	363
14 in. (350 mm)	15.3 in. (385 mm)	350		0.31	8	3/32 in. (2 mm)	14.49	362
14 in. (350 mm)	15.3 in. (385 mm)		50	0.33	8	3/32 in. (2 mm)	14.45	361
14 in. (350 mm)	15.3 in. (385 mm)		51	0.36	9	3/32 in. (2 mm)	14.39	360
14 in. (350 mm)	15.3 in. (385 mm)		52	0.39	10	3/32 in. (2 mm)	14.33	358
14 in. (350 mm)	15.3 in. (385 mm)		53	0.42	11	3/32 in. (2 mm)	14.27	357
14 in. (350 mm)	15.3 in. (385 mm)		54	0.45	11	3/32 in. (2 mm)	14.21	355
14 in. (350 mm)	15.3 in. (385 mm)		55	0.48	12	3/32 in. (2 mm)	14.15	354
14 in. (350 mm)	15.3 in. (385 mm)		56	0.51	13	3/32 in. (2 mm)	14.09	352

(continues)

N **Table A.10.1.3** *Continued*

Pipe Size in. (mm)	OD in. (mm)	Pressure Class	Thickness Class	Wall Thickness in.	Wall Thickness mm	Minimum Lining Thickness* in. (mm)	ID with Lining in.	ID with Lining mm
16 in. (400 mm)	17.4 in. (435 mm)	250		0.3	8	3/32 in. (2 mm)	16.61	415
16 in. (400 mm)	17.4 in. (435 mm)	300		0.32	8	3/32 in. (2 mm)	16.57	414
16 in. (400 mm)	17.4 in. (435 mm)	350		0.34	9	3/32 in. (2 mm)	16.53	413
16 in. (400 mm)	17.4 in. (435 mm)		50	0.34	9	3/32 in. (2 mm)	16.53	413
16 in. (400 mm)	17.4 in. (435 mm)		51	0.37	9	3/32 in. (2 mm)	16.47	412
16 in. (400 mm)	17.4 in. (435 mm)		52	0.4	10	3/32 in. (2 mm)	16.41	410
16 in. (400 mm)	17.4 in. (435 mm)		53	0.43	11	3/32 in. (2 mm)	16.35	409
16 in. (400 mm)	17.4 in. (435 mm)		54	0.46	12	3/32 in. (2 mm)	16.29	407
16 in. (400 mm)	17.4 in. (435 mm)		55	0.49	12	3/32 in. (2 mm)	16.23	406
16 in. (400 mm)	17.4 in. (435 mm)		56	0.52	13	3/32 in. (2 mm)	16.17	404
18 in. (450 mm)	19.5 in. (488 mm)	250		0.31	8	3/32 in. (2 mm)	18.69	467
18 in. (450 mm)	19.5 in. (488 mm)	300		0.34	9	3/32 in. (2 mm)	18.63	466
18 in. (450 mm)	19.5 in. (488 mm)	350		0.36	9	3/32 in. (2 mm)	18.59	465
18 in. (450 mm)	19.5 in. (488 mm)		50	0.35	9	3/32 in. (2 mm)	18.61	465
18 in. (450 mm)	19.5 in. (488 mm)		51	0.35	9	3/32 in. (2 mm)	18.61	465
18 in. (450 mm)	19.5 in. (488 mm)		52	0.41	10	3/32 in. (2 mm)	18.49	462
18 in. (450 mm)	19.5 in. (488 mm)		53	0.44	11	3/32 in. (2 mm)	18.43	461
18 in. (450 mm)	19.5 in. (488 mm)		54	0.47	12	3/32 in. (2 mm)	18.37	459
18 in. (450 mm)	19.5 in. (488 mm)		55	0.5	13	3/32 in. (2 mm)	18.31	458
18 in. (450 mm)	19.5 in. (488 mm)		56	0.53	13	3/32 in. (2 mm)	18.25	456
20 in. (500 mm)	21.6 in. (540 mm)	250		0.33	8	3/32 in. (2 mm)	20.75	519
20 in. (500 mm)	21.6 in. (540 mm)	300		0.36	9	3/32 in. (2 mm)	20.69	517
20 in. (500 mm)	21.6 in. (540 mm)	350		0.38	10	3/32 in. (2 mm)	20.65	516
20 in. (500 mm)	21.6 in. (540 mm)		50	0.36	9	3/32 in. (2 mm)	20.69	517
20 in. (500 mm)	21.6 in. (540 mm)		51	0.39	10	3/32 in. (2 mm)	20.63	516
20 in. (500 mm)	21.6 in. (540 mm)		52	0.42	11	3/32 in. (2 mm)	20.57	514
20 in. (500 mm)	21.6 in. (540 mm)		53	0.45	11	3/32 in. (2 mm)	20.51	513
20 in. (500 mm)	21.6 in. (540 mm)		54	0.48	12	3/32 in. (2 mm)	20.45	511
20 in. (500 mm)	21.6 in. (540 mm)		55	0.51	13	3/32 in. (2 mm)	20.39	510
20 in. (500 mm)	21.6 in. (540 mm)		56	0.54	14	3/32 in. (2 mm)	20.33	508
24 in. (600 mm)	25.8 in. (645 mm)	200		0.33	8	3/32 in. (2 mm)	24.95	624
24 in. (600 mm)	25.8 in. (645 mm)	250		0.37	9	3/32 in. (2 mm)	24.87	622
24 in. (600 mm)	25.8 in. (645 mm)	300		0.4	10	3/32 in. (2 mm)	24.81	620
24 in. (600 mm)	25.8 in. (645 mm)	350		0.43	11	3/32 in. (2 mm)	24.75	619
24 in. (600 mm)	25.8 in. (645 mm)		50	0.38	10	3/32 in. (2 mm)	24.85	621
24 in. (600 mm)	25.8 in. (645 mm)		51	0.41	10	3/32 in. (2 mm)	24.79	620
24 in. (600 mm)	25.8 in. (645 mm)		52	0.44	11	3/32 in. (2 mm)	24.73	618
24 in. (600 mm)	25.8 in. (645 mm)		53	0.47	12	3/32 in. (2 mm)	24.67	617
24 in. (600 mm)	25.8 in. (645 mm)		54	0.5	13	3/32 in. (2 mm)	24.61	615
24 in. (600 mm)	25.8 in. (645 mm)		55	0.53	13	3/32 in. (2 mm)	24.55	614
24 in. (600 mm)	25.8 in. (645 mm)		56	0.56	14	3/32 in. (2 mm)	24.49	612

ID: internal diameter; OD: outside diameter.

*Note: This table is appropriate for single lining thickness only. The actual lining thickness should be obtained from the manufacturer.

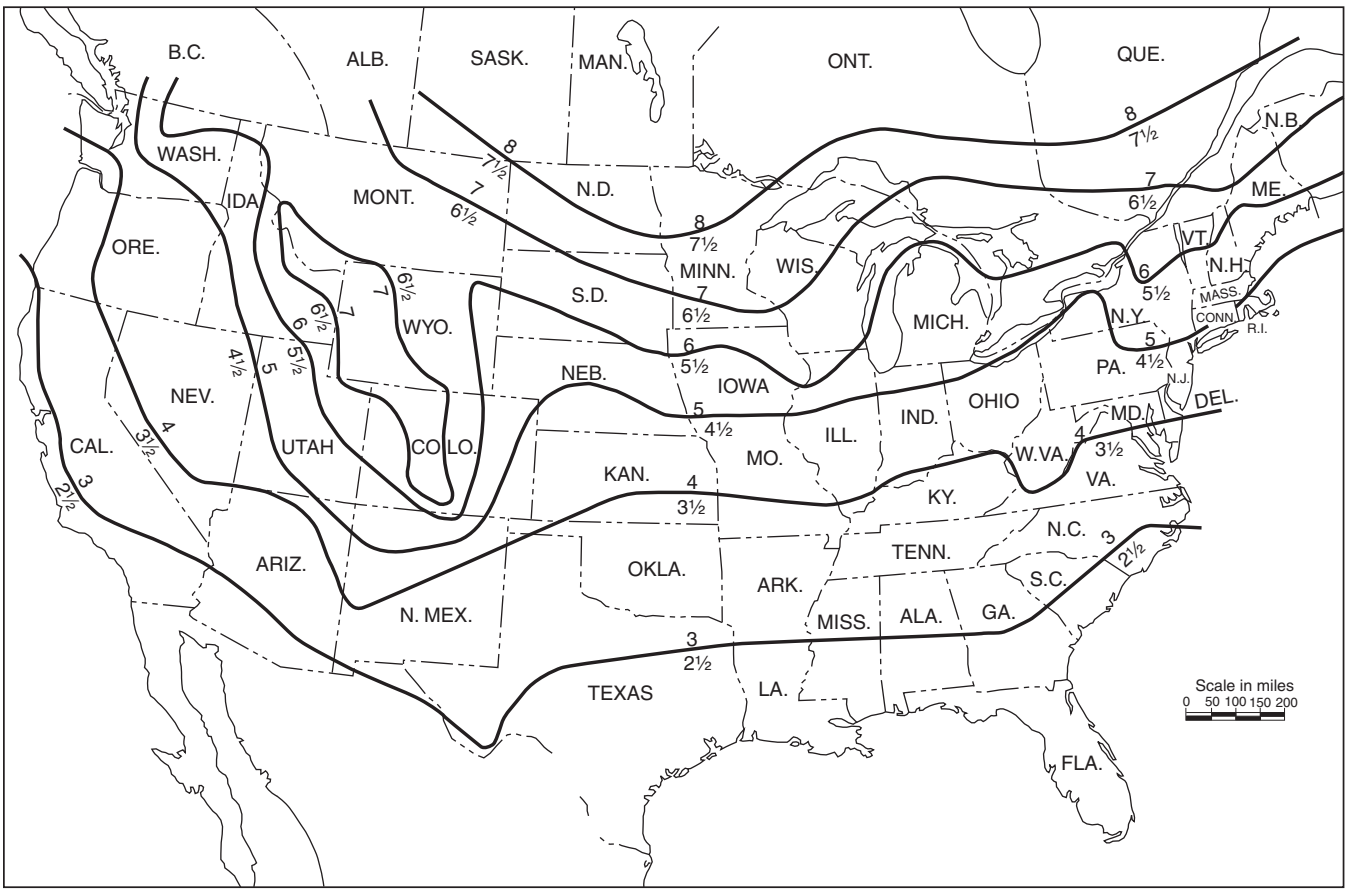

Notes:
1. For SI Units, 1 in. = 25.4 mm; 1 ft = 0.304 m.
2. Where frost penetration is a factor, the depth of cover shown averages 6 in. greater than that usually provided by the municipal waterworks. Greater depth is needed because of the absence of flow in yard mains.

FIGURE A.10.4.2(a) Recommended Depth of Cover (in feet) Above Top of Underground Yard Mains.

N **A.10.4.3.2.3** It is the intent of this section to require a valve at each point where the pipe enters the trench when the trench traverses the entire building. Generally if the piping terminates at a point within the building, a valve is usually provided at a riser, allowing isolation of the pipe section in the trench.

A.10.5.1 Where lightning protection is provided for a structure, NFPA 780, Section 4.14, requires that all grounding media, including underground metallic piping systems, be interconnected to provide common ground potential. These underground piping systems are not permitted to be substituted for grounding electrodes but must be bonded to the lightning protection grounding system. Where galvanic corrosion is of concern, this bond can be made via a spark gap or gas discharge tube.

A.10.5.1.1 While the use of the underground fire protection piping as the grounding electrode for the building is prohibited, *NFPA 70* requires that all metallic piping systems be bonded and grounded to disperse stray electrical currents. Therefore, the fire protection piping will be bonded to other metallic systems and grounded, but the electrical system will need an additional ground for its operation.

A.10.6 It is a fundamental design principle of fluid mechanics that dynamic and static pressures, acting at changes in size or direction of a pipe, produce unbalanced thrust forces at locations such as bends, tees, wyes, dead ends, and reducer offsets. This design principle includes consideration of lateral soil pressure and pipe/soil friction, variables that can be reliably determined using current soil engineering knowledge. Refer to A.10.6.2 for a list of references for use in calculating and determining joint restraint systems.

Section 10.6 does not mandate which method of restraint should be used. This decision is left to the design professional or the owner.

Except for the case of welded joints and approved special restrained joints, such as is provided by approved mechanical joint retainer glands or locked mechanical and push-on joints, the usual joints for underground pipe are expected to be held in place by the soil in which the pipe is buried. Gasketed push-on and mechanical joints without special locking devices have limited ability to resist separation due to movement of the pipe.

A.10.6.1 The use of concrete thrust blocks is one method of restraint, provided that stable soil conditions prevail and space requirements permit placement. Successful blocking is dependent on factors such as location, availability and placement of concrete, and possibility of disturbance by future excavations.

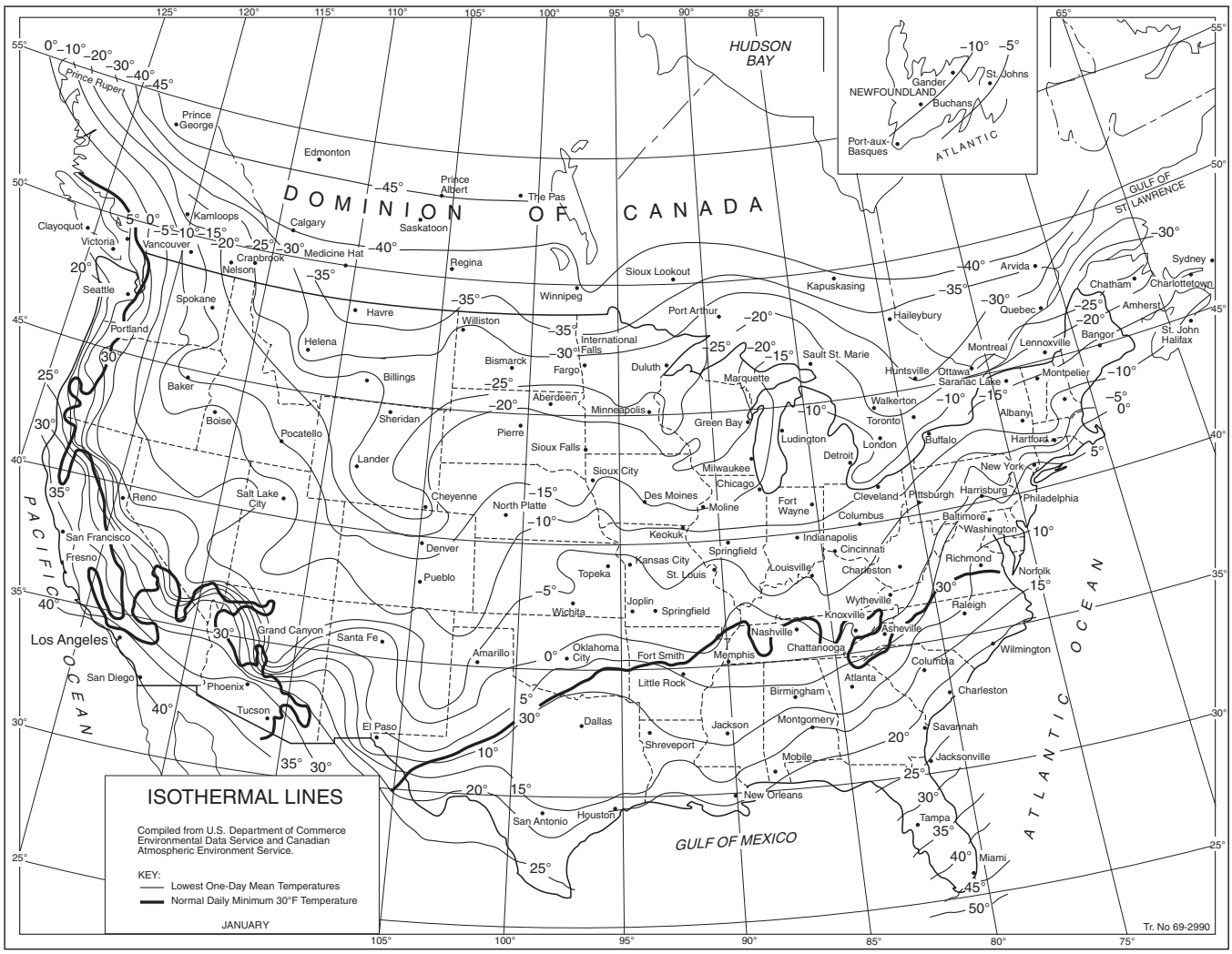

Source: Compiled from United States Weather Bureau records.
For SI units, °C = ⅝ (°F −32); 1 mi = 1.609 km.

Δ FIGURE A.10.4.2(b) Isothermal Lines — Lowest One-Day Mean Temperature (°F).

Resistance is provided by transferring the thrust force to the soil through the larger bearing area of the block so that the resultant pressure against the soil does not exceed the horizontal bearing strength of the soil. The design of thrust blocks consists of determining the appropriate bearing area of the block for a particular set of conditions. The parameters involved in the design include pipe size, design pressure, angle of the bend (or configuration of the fitting involved), and the horizontal bearing strength of the soil.

Table A.10.6.1(a) gives the nominal thrust at fittings for various sizes of ductile iron and PVC piping. Figure A.10.6.1(a) shows an example of how thrust forces act on a piping bend.

Thrust blocks are generally categorized into two groups — bearing and gravity blocks. Figure A.10.6.1(b) depicts a typical bearing thrust block on a horizontal bend.

The following are general criteria for bearing block design:

(1) The bearing surface should, where possible, be placed against undisturbed soil.

(2) Where it is not possible to place the bearing surface against undisturbed soil, the fill between the bearing surface and undisturbed soil should be compacted to at least 90 percent Standard Proctor density.

(3) Block height (h) should be equal to or less than one-half the total depth to the bottom of the block (H_t) but not less than the pipe diameter (D).

(4) Block height (h) should be chosen so that the calculated block width (b) varies between one and two times the height.

(5) Gravity thrust blocks can be used to resist thrust at vertical down bends. In a gravity thrust block, the weight of the block is the force providing equilibrium with the thrust force. The design problem is then to calculate the required volume of the thrust block of a known density. The vertical component of the thrust force in Figure A.10.6.1(c) is balanced by the weight of the block. For required horizontal bearing block areas, see Table A.10.6.1(b).

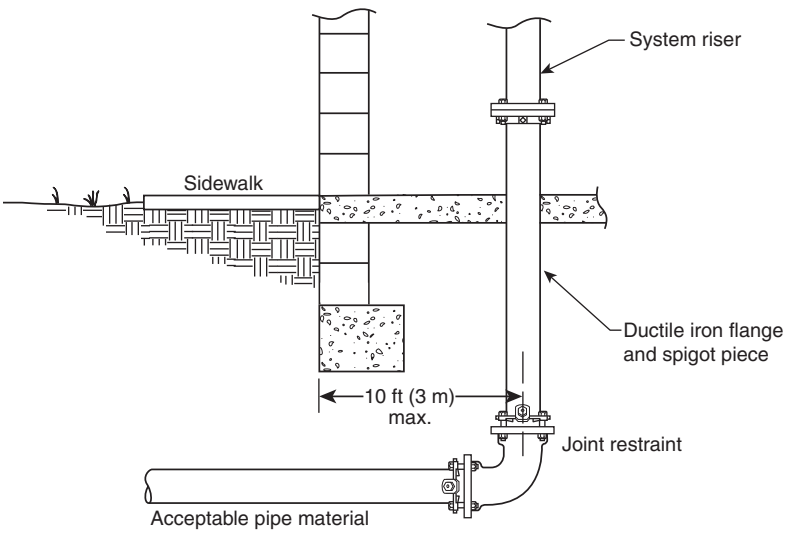

Δ **FIGURE A.10.4.3.1 Riser Entrance Location.**

The required block area (A_b) is as follows:

Δ **[A.10.6.1a]**

$$A_b = (h)(b) = \frac{T(S_f)}{S_b}$$

where:
A_b = required block area (ft^2)
h = block height (ft)
b = calculated block width (ft)
T = thrust force (lbf)
S_f = safety factor (usually 1.5)
S_b = bearing strength (lb/ft^2)

Then, for a horizontal bend, the following formula is used:

[A.10.6.1b]

$$b = \frac{2(S_f)(P)(A)\sin\left(\frac{\theta}{2}\right)}{(h)(S_b)}$$

where:
b = calculated block width (ft)
S_f = safety factor (usually 1.5 for thrust block design)
P = water pressure (lb/in.^{2})
A = cross-sectional area of pipe based on outside diameter
h = block height (ft)
S_b = horizontal bearing strength of soil (lb/ft^2) (in.^{2})

A similar approach can be used to design bearing blocks to resist the thrust forces at locations such as tees and dead ends. Typical values for conservative horizontal bearing strengths of various soil types are listed in Table A.10.6.1(c).

In lieu of the values for soil bearing strength shown in Table A.10.6.1(c), a designer might choose to use calculated Rankine passive pressure (P_p) or other determination of soil bearing strength based on actual soil properties.

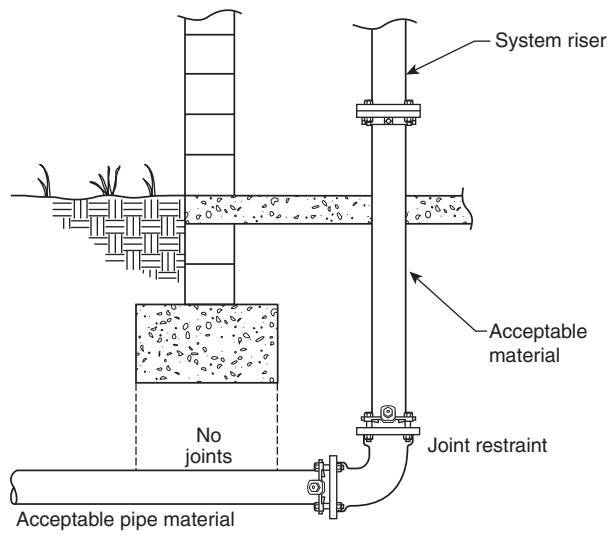

Δ **FIGURE A.10.4.3.1.1 Pipe Joint Location in Relation to Foundation Footings.**

It can be easily shown that $T_y = PA \sin \theta$. The required volume of the block is as follows:

Δ **[A.10.6.1c]**

$$V_g = \frac{S_f PA \sin \theta}{W_m}$$

where:
V_g = block volume (ft^3)
S_f = safety factor
P = water pressure (psi)
A = cross-sectional area of pipe interior
W_m = density of block material (lb/ft^3)

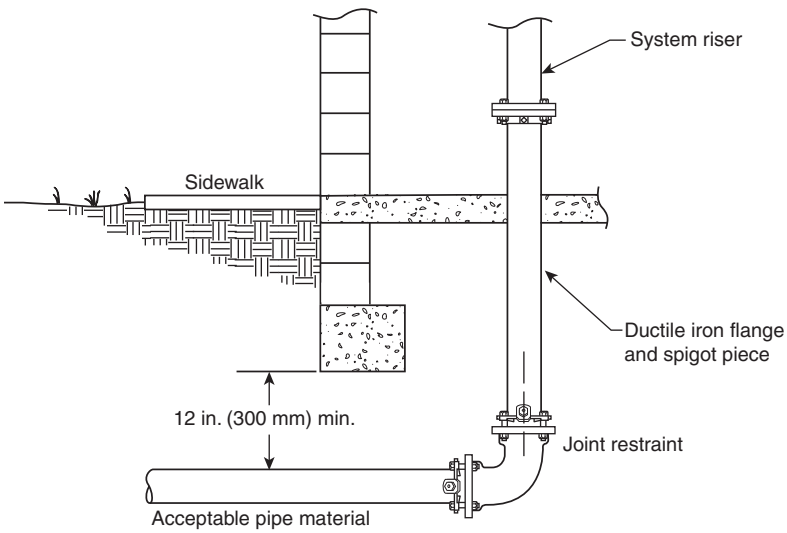

Δ **FIGURE A.10.4.3.1.2 Piping Clearance from Foundation.**

In a case such as the one shown, the horizontal component of thrust force is calculated as follows:

Δ **[A.10.6.1d]**

$$T_x = PA(1 - \cos\theta)$$

where:
T_x = horizontal component of thrust force
P = water pressure (psi)
A = cross-sectional area of pipe interior

The horizontal component of thrust force must be resisted by the bearing of the right side of the block against the soil. Analysis of this aspect follows the same principles as the previous section on bearing blocks.

Δ **A.10.6.2** A method for providing thrust restraint is the use of restrained joints. A restrained joint is a special type of joint that is designed to provide longitudinal restraint. Restrained joint systems function in a manner similar to that of thrust blocks, insofar as the reaction of the entire restrained unit of piping with the soil balances the thrust forces.

The objective in designing a restrained joint thrust restraint system is to determine the length of pipe that must be restrained on each side of the focus of the thrust force, which occurs at a change in direction. This will be a function of the pipe size, the internal pressure, the depth of cover, and the characteristics of the solid surrounding the pipe. The manufacturer's installation instructions should be referenced to determine the distance from each change in direction that joints should be restrained.

N **Table A.10.6.1(a) Thrust at Fittings at 100 psi (6.9 bar) Water Pressure for Ductile Iron and PVC Pipe**

Nominal Pipe Diameter in. (mm)	Total Pounds (Newtons)											
	Dead End		90 Degree		45 Degree		22½ Degree		11¼ Degree		5⅛ Degree	
	lbf	N	lbf	N	lbf	N	lbf	N	lbf	N	lbf	N
4 (100)	1,810	8,051	2,559	11,383	1,385	6,161	706	3,140	355	1,579	162	721
6 (150)	3,739	16,632	5,288	23,522	2,862	12,731	1,459	6,490	733	3,261	334	1,486
8 (200)	6,433	28,615	9,097	40,465	4,923	21,899	2,510	11,165	1,261	5,609	575	2,558
10 (250)	9,677	43,045	13,685	60,874	7,406	32,944	3,776	16,796	1,897	8,438	865	3,848
12 300)	13,685	60,874	19,353	86,086	10,474	46,591	5,340	23,753	2,683	11,935	1,224	5,445
14 (350)	18,385	81,781	26,001	115,658	14,072	62,595	7,174	31,912	3,604	16,031	1,644	7,313
16 (400)	23,779	105,774	33,628	149,585	18,199	80,953	9,278	41,271	4,661	20,733	2,126	9,457
18 (450)	29,865	132,846	42,235	187,871	22,858	101,677	11,653	51,835	5,855	26,044	2,670	11,877
20 (500)	36,644	163,001	51,822	230,516	28,046	124,755	14,298	63,601	7,183	31,952	3,277	14,577
24 (600)	52,279	232,548	73,934	328,875	40,013	177,987	20,398	90,735	10,249	45,590	4,675	20,795
30 (750)	80,425	357,748	113,738	505,932	61,554	273,806	31,380	139,585	15,766	70,131	7,191	31,987
36 (900)	115,209	512,475	162,931	724,753	88,177	392,231	44,952	199,956	22,585	100,463	10,302	45,826
42 (1,050)	155,528	691,823	219,950	978,386	119,036	529,498	60,684	269,936	30,489	135,622	13,907	61,861
48 (1,200)	202,683	901,579	286,637	1,275,024	155,127	690,039	79,083	351,779	39,733	176,741	18,124	80,620

Notes:
(1) For SI units, 1 lb = 0.454 kg; 1 in. = 25 mm.
(2) To determine thrust at pressure other than 100 psi (6.9 bar), multiply the thrust obtained in the table by the ratio of the pressure to 100 psi (6.9 bar). For example, the thrust on a 12 in. (305 mm), 90-degree bend at 125 psi (8.6 bar) is 19,353 × 125/100 = 24,191 lb (10,973 kg).

Δ Table A.10.6.1(b) Required Horizontal Bearing Block Area

Nominal Pipe Diameter (in.) (mm)	Bearing Block Area (ft^2) (m^2)	Nominal Pipe Diameter (in.) (mm)	Bearing Block Area (ft^2) (m^2)	Nominal Pipe Diameter (in.) (mm)	Bearing Block Area (ft^2) (m^2)
3 (80)	2.6 (0.24)	12 (300)	29.0 (2.7)	24 (600)	110.9 (10.3)
4 (100)	3.8 (0.35)	14 (350)	39.0 (3.6)	30 (750)	170.6 (15.8)
6 (150)	7.9 (0.73)	16 (400)	50.4 (4.7)	36 (900)	244.4 (22.7)
8 (200)	13.6 (1.3)	18 (450)	63.3 (5.9)	42 (1050)	329.9 (30.6)
10 (250)	20.5 (2)	20 (500)	77.7 (7.2)	48 (1200)	430.0 (39.9)

Notes:
(1) Although the bearing strength values in this table have been used successfully in the design of thrust blocks and are considered to be conservative, their accuracy is totally dependent on accurate soil identification and evaluation. The ultimate responsibility for selecting the proper bearing strength of a particular soil type must rest with the design engineer.
(2) Values listed are based on a 90-degree horizontal bend, an internal pressure of 100 psi (6.9 bar), a soil horizontal bearing strength of 1000 lb/ft ^{2} (4880 kg/m^2), a safety factor of 1.5, and ductile iron pipe outside diameters.
(a) For other horizontal bends, multiply by the following coefficients: for 45 degrees, 0.541; for 22½ degrees, 0.276; for 11¼ degrees, 0.139.
(b) For other internal pressures, multiply by ratio to 100 psi (6.9 bar).
(c) For other soil horizontal bearing strengths, divide by ratio to 1000 lb/ft^2 (4880 kg/m^2).
(d) For other safety factors, multiply by ratio to 1.5.
Example: Using Table A.10.6.1(b), find the horizontal bearing block area for a 6 in. (150 mm) diameter, 45-degree bend with an internal pressure of 150 psi (10.3 bar). The soil bearing strength is 3000 lb/ft^2 (14850 kg/m^2), and the safety factor is 1.5.
From Table A.10.6.1(b), the required bearing block area for a 6 in. (150 mm) diameter, 90-degree bend with an internal pressure of 100 psi (6.9 bar) and a soil horizontal bearing strength of 1000 psi (70 bar) is 7.9 ft^2 (0.73 m^2).
For example:

[A.10.6.1]

$$Area = \frac{7.9\ ft^2 (0.541)\left(\frac{150}{100}\right)}{\left(\frac{3000}{1000}\right)} = 2.1\ ft^2$$

The following documents apply to the design, calculation, and determination of restrained joint systems:

(1) *Thrust Restraint Design for Ductile-Iron Pipe*, Ductile Iron Pipe Research Association
(2) AWWA M41, *Ductile-Iron Pipe and Fittings*
(3) AWWA M9, *Concrete Pressure Pipe*
(4) AWWA M11, *Steel Pipe — A Guide for Design and Installation*
(5) *Thrust Restraint Design Equations and Tables for Ductile-Iron and PVC Pipe*, EBAA Iron, Inc.

Figure A.10.6.2 shows an example of a typical connection to a fire protection system riser utilizing restrained joint pipe.

A.10.6.2.5 Examples of materials and the standards covering these materials are as follows:

(1) Clamps, steel
(2) Rods, steel
(3) Bolts, steel (ASTM A307, *Standard Specification for Carbon Steel Bolts, Studs, Threaded Rod 60,000 PSI Tensile Strength*)
(4) Washers, steel, cast iron (Class A cast iron as defined by ASTM A126, *Standard Specification for Gray Iron Castings for Valves, Flanges and Pipe Fittings*)
(5) Anchor straps, plug straps, steel
(6) Rod couplings, turnbuckles, malleable iron (ASTM A197/A197M, *Standard Specification for Cupola Malleable Iron*)

Table A.10.6.1(c) Horizontal Bearing Strengths

Soil	Bearing Strength (S_b) lb/ft^2	Bearing Strength (S_b) kN/m^2
Muck	0	0
Soft clay	1000	48
Silt	1500	72
Sandy silt	3000	145
Sand	4000	190
Sand clay	6000	285
Hard clay	9000	430

Note: Although the bearing strength values in this table have been used successfully in the design of thrust blocks and are considered to be conservative, their accuracy is totally dependent on accurate soil identification and evaluation. The ultimate responsibility for selecting the proper bearing strength of a particular soil type must rest with the design engineer.

The materials specified in A.10.6.2.5(1) through A.10.6.2.5(6) do not preclude the use of other materials that also satisfy the requirements of this section.

A.10.6.3 Solvent-cemented and heat-fused joints such as those used with CPVC piping and fittings are considered restrained. They do not require thrust blocks.

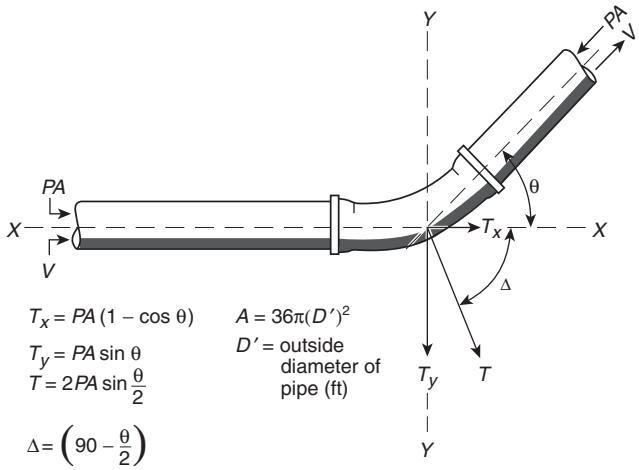

$T_x = PA(1 - \cos\theta)$

$T_y = PA \sin\theta$

$T = 2PA \sin\frac{\theta}{2}$

$\Delta = \left(90 - \frac{\theta}{2}\right)$

$A = 36\pi(D')^2$

D' = outside diameter of pipe (ft)

T = thrust force resulting from change in direction of flow (lbf)

T_x = component of thrust force acting parallel to original direction of flow (lbf)

T_y = component of thrust force acting perpendicular to original direction of flow (lbf)

P = water pressure (psi^2)

A = cross-sectional area of pipe based on outside diameter (in.^{2})

V = velocity in direction of flow

FIGURE A.10.6.1(a) Thrust Forces Acting on Bend.

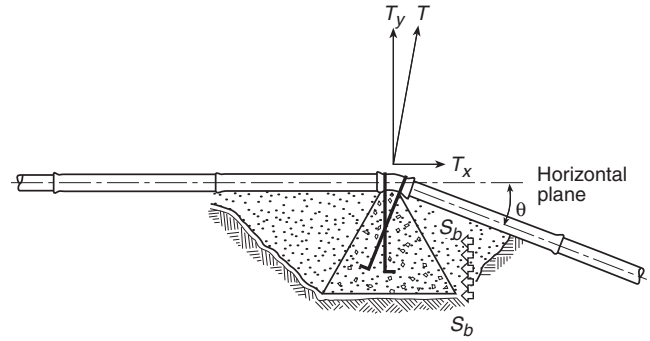

T = thrust force resulting from change of direction of flow

T_x = horizontal component of thrust force

T_y = vertical component of thrust force

S_b = horizontal bearing strength of soil

FIGURE A.10.6.1(c) Gravity Thrust Block.

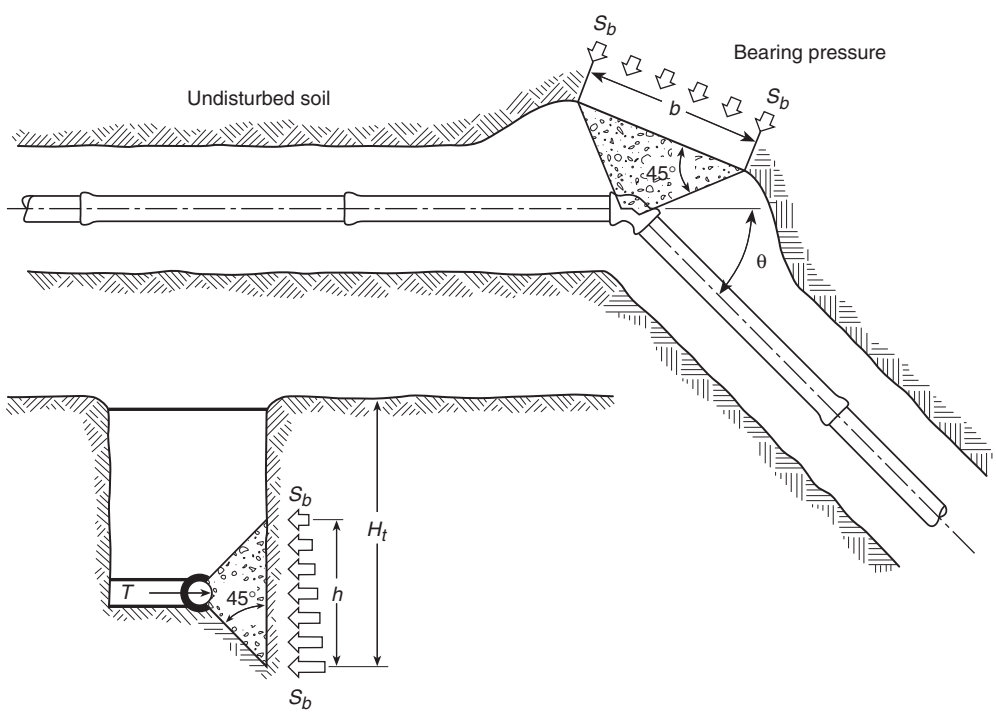

T = thrust force resulting from change in direction of flow

S_b = horizontal bearing strength of soil

h = block height

H_t = total depth to bottom of block

FIGURE A.10.6.1(b) Bearing Thrust Block.

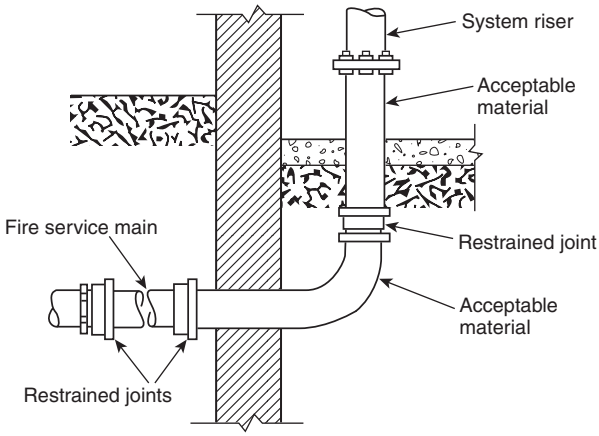

Δ **FIGURE A.10.6.2 Typical Connection to Fire Protection System Riser Illustrating Restrained Joints.**

N **A.10.9.3** The maximum particle size allowed next to most types of pipe can be found in ASTM C136/136M, *Standard Test Method for Sieve Analysis of Fine and Coarse Aggregates*, ASTM D2487, *Standard Practice for Classification of Soils for Engineering Purposes (Unified Soil Classification System)*, AWWA M55, *PE Pipe — Design and Installation*, AWWA M23, *PVC Pipe — Design and Installation*, trade association handbooks, or manufacturers' literature. These publications typically recommend one maximum allowable particle size that applies to the bedding, embedment, and backfill, which might be different materials. The maximum particle size might be dependent on the pipe diameter.

A.10.10.2.1 Underground mains and lead-in connections to system risers should be flushed through hydrants at dead ends of the system or through accessible aboveground flushing outlets allowing the water to run until clear. Figure A.10.10.2.1 shows acceptable examples of flushing the system. If water is supplied from more than one source or from a looped system, divisional valves should be closed to produce a high-velocity flow through each single line. The flows specified in Table 10.10.2.1.3 will produce a velocity of at least 10 ft/sec (3.0 m/sec), which is necessary for cleaning the pipe and for lifting foreign material to an aboveground flushing outlet.

A.10.10.2.1.3 The velocity of approximately 10 ft/sec (3.0 m/sec) was used to develop Table 10.10.2.1.3 because this velocity has been shown to be sufficient for moving obstructive material out of the pipes. It is not important that the velocity equal exactly 10 ft/sec (3.0 m/sec), so there is no reason to increase the flow during the test for slightly different internal pipe dimensions. Note that where underground pipe serves as suction pipe for a fire pump, NFPA 20 requires greater flows for flushing the pipe.

Δ **A.10.10.2.2.1** For example, consider a sprinkler system with a connection to a public water service main for its water supply. A 100 psi (6.9 bar) rated pump is installed in the connection. With a maximum normal public water supply of 70 psi (4.8 bar), at the low elevation point of the individual system or portion of the system being tested and a 120 psi (8.3 bar) pump (churn) pressure, the hydrostatic test pressure is 70 psi (4.8 bar), 120 psi (8.3 bar), 50 psi (3.5 bar), or 240 psi (16.5 bar).

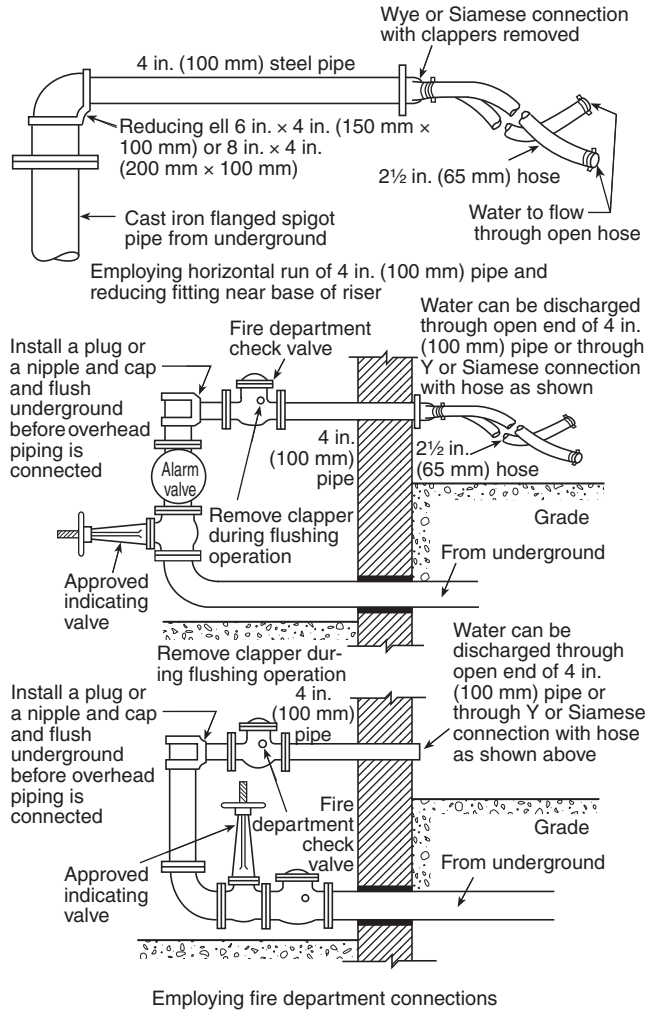

Δ **FIGURE A.10.10.2.1 Methods of Flushing Water Supply Connections.**

To reduce the possibility of serious water damage in case of a break, pressure can be introduced by a small pump, the main controlling gate meanwhile being kept shut during the test.

Polybutylene pipe will undergo expansion during initial pressurization. In this case, a reduction in gauge pressure might not necessarily indicate a leak. The pressure reduction should not exceed the manufacturer's specifications and listing criteria.

When systems having rigid thermoplastic piping such as CPVC are pressure tested, the sprinkler system should be filled with water. The air should be bled from the highest and farthest sprinklers. Compressed air or compressed gas should never be used to test systems with rigid thermoplastic pipe.

A recommended test procedure is as follows: The water pressure is to be increased in 50 psi (3.5 bar) increments until the test pressure described in 10.10.2.2.1 is attained. After each increase in pressure, observations are to be made of the stability of the joints. These observations are to include such items as protrusion or extrusion of the gasket, leakage, or other factors likely to affect the continued use of a pipe in service. During the test, the pressure is not to be increased by the next incre-

ment until the joint has become stable. This applies particularly to movement of the gasket. After the pressure has been increased to the required maximum value, it is held for 2 hours while observations are made for leakage and the pressure readings are checked.

A.10.10.2.2.4 Hydrostatic tests should be made before the joints are covered, so that any leaks can be detected. Thrust blocks should be sufficiently hardened before hydrostatic testing is begun. If the joints are covered with backfill prior to testing, the contractor remains responsible for locating and correcting any leakage in excess of that permitted.

Δ **A.10.10.2.2.6** One acceptable means of completing this test is to utilize a pressure pump that draws its water supply from a full container. At the completion of the 2-hour test, the amount of water to refill the container can be measured to determine the amount of makeup water. In order to minimize pressure loss, the piping should be flushed to remove any trapped air. Additionally, the piping could be pressurized prior to the hydrostatic test to account for expansion, absorption, entrapped air, and so on.

The use of a blind flange or skillet is preferred for hydrostatically testing segments of new work. Metal-seated valves are susceptible to developing slight imperfections during transport, installation, and operation and thus can be likely to leak more than 1 fl oz/in. (1.2 mL/mm) of valve diameter per hour. For this reason, the blind flange should be used when hydrostatically testing.

N **A.10.10.2.3** As an example, the following standards contain test requirements AWWA C600, *Installation of Ductile-Iron Water Mains and Their Appurtenances*, AWWA C602, *Cement-Mortar Lining of Water Pipe Lines in Place, 4 in. (100 mm) and Larger*, AWWA C900, *Polyvinyl Chloride (PVC) Pressure Pipe, 4 in. Through 12 in. (100 mm Through 300 mm), for Water Transmission and Distribution*, or ASTM F2164, *Standard Practice for Field Leak Testing of Polyethylene (PE) and Crosslinked Polyethylene (PEX) Pressure Piping Systems Using Hydrostatic Pressure*.

A.11.1 When calculating the actual inside diameter of cement mortar–lined pipe, twice the thickness of the pipe wall and twice the thickness of the lining need to be subtracted from the outside diameter of the pipe. The actual lining thickness should be obtained from the manufacturer.

Table A.11.1(a) and Table A.11.1(b) indicate the minimum lining thickness.

Δ **Table A.11.1(a) Minimum Thickness of Lining for Ductile-Iron Pipe and Fittings**

Pipe and Fitting Size		Thickness of Lining	
in.	mm	in.	mm
3–12	80–300	1/16	1.6
14–24	350–600	3/32	2
30–64	750–1600	1/8	3

Source: AWWA C104/A21.4, *Cement-Mortar Lining for Ductile-Iron Pipe and Fittings*.

Δ **Table A.11.1(b) Minimum Thickness of Lining for Steel Pipe**

Nominal Pipe Size		Thickness of Lining		Tolerance	
in.	mm	in.	mm	in.	mm
4–10	100–250	1/4	6	−1/16, +1/8	−1.6, +3
12–20	300–500	5/16	8	−1/16, +1/8	−1.6, +3
24–36	600–900	3/8	10	−1/16, +1/8	−1.6, +3
>36	>900	1/2	13	−1/16, +3/16	−1.6, +5

Source: AWWA C105/A21.5, *Polyethylene Encasement for Ductile-Iron Pipe Systems*.

Annex B Valve Supervision Issues

This annex is not a part of the requirements of this NFPA document but is included for informational purposes only.

B.1 Responsibility. The management is responsible for the supervision of valves controlling the water supply for fire protection and should exert every effort to see that the valves are maintained in the normally open position. This effort includes special precautions to ensure that protection is promptly restored by completely opening valves that are necessarily closed during repairs or alterations. The precautions apply equally to the following:

(1) Valves controlling sprinklers and other fixed water-based fire suppression systems
(2) Hydrants
(3) Tanks
(4) Standpipes
(5) Pumps
(6) Street connections
(7) Sectional valves

Central station supervisory service systems or proprietary supervisory service systems, or a combination of these methods of valve supervision, as described in the following paragraphs, are considered essential to ensure that the valves controlling fire protection systems are in the normally open position. The methods described are intended as an aid to the person responsible for developing a systematic method of determining that the valves controlling sprinkler systems and other fire protection devices are open.

Continual vigilance is necessary if valves are to be kept in the open position. Responsible day and night employees should be familiar with the location of all valves and their proper use.

The authority having jurisdiction should be consulted as to the type of valve supervision required. Contracts for equipment should specify that all details are to be subject to the approval of the authority having jurisdiction.

B.2 Central Station Supervisory Service Systems.

Central station supervisory service systems involve complete, constant, and automatic supervision of valves by electrically operated devices and circuits. The devices and circuits are continually under test and operate through an approved outside central station in compliance with *NFPA 72*. It is understood that only the portions of *NFPA 72* that relate to valve supervision should apply.

B.3 Proprietary Supervisory Service Systems. Proprietary supervisory service systems include systems in which the operation of a valve produces some form of signal and record at a common point by electrically operated devices and circuits.

The device and circuits are continually under test and operate through a central supervising station at the protected property in compliance with the standards for the installation, maintenance, and use of local protective, auxiliary protective, remote-station protective, and proprietary signaling systems. It is understood that only the portions of the standards that relate to valve supervision should apply.

B.4 Locking and Sealing. The standard method of locking, sealing, and tagging valves to prevent, as far as possible, their unnecessary closing, to obtain notification of such closing, and to aid in restoring the valve to normal condition is a satisfactory alternative to valve supervision. The authority having jurisdiction should be consulted for details for specific cases.

Where electrical supervision is not provided, locks or seals should be provided on all valves and should be of a type acceptable to the authority having jurisdiction.

Seals can be marked to indicate the organization under whose jurisdiction the sealing is conducted. All seals should be attached to the valve in such a manner that the valves cannot be operated without breaking the seals. Seals should be of a character that prevents injury in handling and that prevents reassembly when broken. Where seals are used, valves should be inspected weekly. The authority having jurisdiction can require a valve tag to be used in conjunction with the sealing.

A padlock, with a chain where necessary, is especially desirable to prevent unauthorized closing of valves in areas where valves are subject to tampering. Where such locks are employed, valves should be inspected monthly.

If valves are locked, any distribution of keys should be restricted to only those directly responsible for the fire protection system. Multiple valves should not be locked together; they should be individually locked.

The individual performing inspections should determine that each valve is in the normal position and properly locked or sealed, and so noted on an appropriate record form while still at the valve. The authority having jurisdiction should be consulted for assistance in preparing a suitable report form for this activity.

Identification signs should be provided at each valve to indicate its function and what it controls.

The position of the spindle of OS&Y valves or the target on the indicator valves cannot be accepted as conclusive proof that the valve is fully open. The opening of the valve should be followed by a test to determine that the operating parts have functioned properly.

The test consists of opening the main drain valve and allowing a free flow of water until the gauge reading becomes stationary. If the pressure drop is excessive for the water supply involved, the cause should be determined immediately and the proper remedies taken. Where sectional valves or other special conditions are encountered, other methods of testing should be used.

If it becomes necessary to break a seal for emergency reasons, the valve, following the emergency, should be opened by the individual responsible for the fire protection of the plant or his or her designated representative. The responsible individual should apply a seal at the time of the valve opening. The seal should be maintained in place until such time as the authority having jurisdiction can replace it with a seal of its own.

Seals or locks should not be applied to valves that have been reopened after closure until such time as the inspection procedure is carried out.

Where water is shut off to the sprinkler or other fixed water-based fire suppression systems, a guard or other qualified person should be placed on duty and required to continuously patrol the affected sections of the premises until such time as protection is restored.

During specific critical situations, a responsible individual should be stationed at the valve so that the valve can be reopened promptly if necessary. It is the intent of this recommendation that the individual remain within sight of the valve and have no additional duties. This recommendation is considered imperative when fire protection is shut off immediately following a fire.

An inspection of all other fire protection equipment should be made prior to shutting off water in order to ensure that it is in operative condition.

Where changes to fire protection equipment are to be made, as much work as possible should be done in advance of shutting off the water, so that final connections can be made quickly and protection restored promptly. With careful planning, open outlets often can be plugged and protection can be restored on a portion of the equipment while the alterations are being made.

Where changes are to be made in underground piping, as much piping as possible should be laid before shutting off the water for final connections. Where possible, temporary feed lines, such as temporary piping for reconnection of risers by hose lines, should be used to afford maximum protection. The plant, public fire department, and other authorities having jurisdiction should be notified of all impairments to fire protection equipment.

Annex C Recommended Practice for Fire Flow Testing

This annex is not a part of the requirements of this NFPA document but is included for informational purposes only.

C.1 Annex C was developed based upon the procedures contained in the 2016 edition of NFPA 291. For additional information on fire flow testing, see NFPA 291, 2019 edition, Chapter 4, "Flow Testing."

C.1.1 Scope. The scope of this annex is to provide guidance on fire flow testing of hydrants.

C.1.2 Purpose. Fire flow tests are conducted on water distribution systems to determine the rate of flow available at various locations for fire-fighting purposes.

C.1.3 Application.

C.1.3.1 A certain residual pressure in the mains is specified at which the rate of flow should be available.

C.1.3.2 Additional benefit is derived from fire flow tests by the indication of possible deficiencies, such as tuberculation of piping or closed valves or both, which could be corrected to ensure adequate fire flows as needed.

Δ **C.1.4 Units.** Metric units of measurement in this recommended practice are in accordance with the modernized metric system known as the International System of Units (SI). Two units (liter and bar), outside of but recognized by SI, are commonly used in international fire protection. These units are listed in Table C.1.4 with conversion factors.

C.1.4.1 If a value for measurement as given in this recommended practice is followed by an equivalent value in other units, the first value stated is to be regarded as the recommendation. A given equivalent value might be approximate.

C.2 Referenced Publications.

C.2.1 The documents or portions thereof listed in this annex are referenced within this annex and should be considered part of the recommendations of this document.

C.2.2 NFPA Publications. (Reserved)

C.2.3 Other Publications.

C.2.3.1 ASTM Publications. ASTM International, 100 Barr Harbor Drive, P.O. Box C700, West Conshohocken, PA 19428-2959.

IEEE/ASTM-SI-10, *Standard for Use of the International System of Units (SI): The Modern Metric System*, 2010.

C.3 Definitions.

C.3.1 The definitions contained in this annex apply to the terms used in this annex practice. Where terms are not included, common usage of the terms applies.

C.3.2 NFPA Official Definitions.

C.3.2.1 Authority Having Jurisdiction (AHJ). An organization, office, or individual responsible for enforcing the requirements of a code or standard, or for approving equipment, materials, an installation, or a procedure. *(See A.3.2.2.)*

C.3.2.2 Listed. Equipment, materials, or services included in a list published by an organization that is acceptable to the authority having jurisdiction and concerned with evaluation of products or services, that maintains periodic inspection of production of listed equipment or materials or periodic evaluation of services, and whose listing states that either the equipment, material, or service meets appropriate designated standards or has been tested and found suitable for a specified purpose. *(See A.3.2.4.)*

C.3.2.3 Should. Indicates a recommendation or that which is advised but not required.

Δ **Table C.1.4 SI Units and Conversion Factors**

Unit Name	Unit Symbol	Conversion Factor
Liter	L	1 gal = 3.785 L
Liter per minute per square meter	$(L/min)/m^2$	1 gpm ft^2 = $(40.746\ L/min)/m^2$
Cubic decimeter	dm^3	1 gal = 3.785 dm^3
Pascal	Pa	1 psi = 6894.757 Pa
Bar	bar	1 psi = 0.0689 bar
Bar	bar	1 bar = 10^5 Pa

Note: For additional conversions and information, see ASTM SI10, *Standard for Use of the International System of Units (SI): The Modern Metric System*.

C.3.3 General Definitions.

C.3.3.1 Rated Capacity. The flow available from a hydrant at the designated residual pressure (rated pressure) either measured or calculated.

C.3.3.2 Residual Pressure. The pressure that exists in the distribution system, measured at the residual hydrant at the time the flow readings are taken at the flow hydrants.

C.3.3.3 Static Pressure. The pressure that exists at a given point under normal distribution system conditions measured at the residual hydrant with no hydrants flowing.

C.4 Flow Testing.

C.4.1 Rating Pressure.

C.4.1.1 For the purpose of uniform marking of fire hydrants, the ratings should be based on a residual pressure of 20 psi (1.4 bar) for all hydrants having a static pressure in excess of 40 psi (2.8 bar).

C.4.1.2 Hydrants having a static pressure of less than 40 psi (2.7 bar) should be rated at one-half of the static pressure.

C.4.1.3 It is generally recommended that a minimum residual pressure of 20 psi (1.4 bar) should be maintained at hydrants when delivering the fire flow. Fire department pumpers can be operated where hydrant pressures are less, but with difficulty.

C.4.1.4 Where hydrants are well distributed and of the proper size and type (so that friction losses in the hydrant and suction line are not excessive), it might be possible to set a lesser pressure as the minimum pressure.

C.4.1.5 A primary concern should be the ability to maintain sufficient residual pressure to prevent developing a negative pressure at any point in the street mains, which could result in the collapse of the mains or other water system components or back-siphonage of polluted water from some other interconnected source.

C.4.1.6 It should be noted that the use of residual pressures of less than 20 psi (1.4 bar) is not permitted by many state health departments.

C.4.2 Procedure.

C.4.2.1 Tests should be made during a period of ordinary demand.

C.4.2.2 The procedure consists of discharging water at a measured rate of flow from the system at a given location and observing the corresponding pressure drop in the mains.

C.4.3 Layout of Test.

C.4.3.1 After the location where the test is to be run has been determined, a group of test hydrants in the vicinity is selected.

C.4.3.2 Once selected, due consideration should be given to potential interference with traffic flow patterns, damage to surroundings (e.g., roadways, sidewalks, landscapes, vehicles, and pedestrians), and potential flooding problems both local and remote from the test site.

C.4.3.3 One hydrant, designated the residual hydrant, is chosen to be the hydrant where the normal static pressure will be observed with the other hydrants in the group closed, and where the residual pressure will be observed with the other hydrants flowing.

C.4.3.4 This hydrant is chosen so it will be located between the hydrant to be flowed and the large mains that constitute the immediate sources of water supply in the area. In Figure C.4.3.4, test layouts are indicated showing the residual hydrant designated with the letter R and hydrants to be flowed with the letter F.

C.4.3.5 The number of hydrants to be used in any test depends upon the strength of the distribution system in the vicinity of the test location.

C.4.3.6 To obtain satisfactory test results of theoretical calculation of expected flows or rated capacities, sufficient discharge should be achieved to cause a drop in pressure at the residual hydrant of at least 25 percent, or to flow the total demand necessary for fire-fighting purposes.

C.4.3.7 If the mains are small and the system weak, only one or two hydrants need to be flowed.

C.4.3.8 If, on the other hand, the mains are large and the system strong, it might be necessary to flow as many as seven or eight hydrants.

C.4.4 Equipment.

C.4.4.1 The equipment necessary for field work consists of the following:

(1) A single 200 psi (14 bar) bourdon pressure gauge with 1 psi (0.1 bar) graduations
(2) A number of pitot tubes
(3) Hydrant wrenches
(4) 50 or 60 psi (3.4 or 4.1 bar) bourdon pressure gauges with 1 psi (0.1 bar) graduations, and scales with 1/16 in. (1.6 mm) graduations [one pitot tube, a 50 or 60 psi (3.4 or 4.1 bar) gauge, a hydrant wrench, a scale for each hydrant to be flowed]
(5) A special hydrant cap tapped with a hole into which is fitted a short length of 1/4 in. (6 mm) brass pipe provided with a T connection for the 200 psi (14 bar) gauge and a cock at the end for relieving air pressure

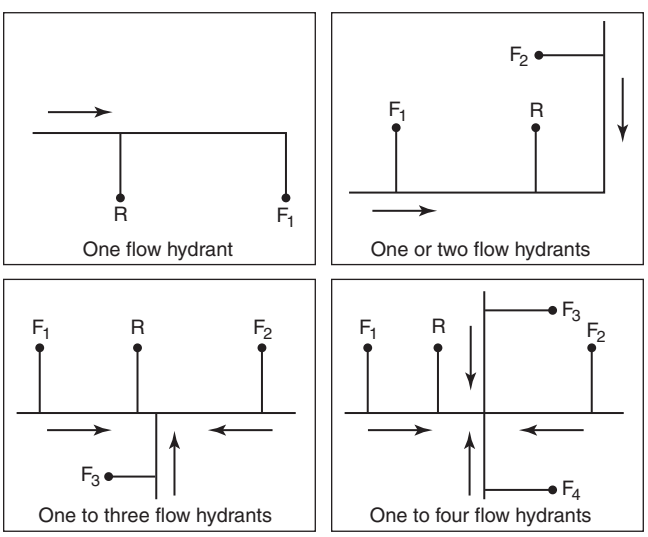

Arrows indicate direction of flow: R – residual hydrant; F – flow hydrant

FIGURE C.4.3.4 Suggested Test Layout for Hydrants.

C.4.4.2 All pressure gauges should be calibrated at least every 12 months, or more frequently depending on use.

C.4.4.3 When more than one hydrant is flowed, it is desirable and could be necessary to use portable radios to facilitate communication between team members.

C.4.4.4 It is preferred to use stream straightener with a known coefficient of discharge when testing hydrants due to a more streamlined flow and a more accurate pitot reading.

C.4.5 Test Procedure.

C.4.5.1 In a typical test, the 200 psi (13.8 bar) gauge is attached to one of the 2½ in. (65 mm) outlets of the residual hydrant using the special cap.

C.4.5.2 The cock on the gauge piping is opened, and the hydrant valve is opened full.

C.4.5.3 As soon as the air is exhausted from the barrel, the cock is closed.

C.4.5.4 A reading (static pressure) is taken when the needle comes to rest.

C.4.5.5 At a given signal, each of the other hydrants is opened in succession, with discharge taking place directly from the open hydrant butts.

C.4.5.6 Hydrants should be opened one at a time.

C.4.5.7 With all hydrants flowing, water should be allowed to flow for a sufficient time to clear all debris and foreign substances from the stream(s).

C.4.5.8 At that time, a signal is given to the people at the hydrants to read the pitot pressure of the streams simultaneously while the residual pressure is being read.

C.4.5.9 The final magnitude of the pressure drop can be controlled by the number of hydrants used and the number of outlets opened on each.

C.4.5.10 After the readings have been taken, hydrants should be shut down slowly, one at a time, to prevent undue surges in the system.

C.4.6 Pitot Readings.

C.4.6.1 When measuring discharge from open hydrant butts, it is always preferable from the standpoint of accuracy to use 2½ in. (65 mm) outlets rather than pumper outlets.

C.4.6.2 In practically all cases, the 2½ in. (65 mm) outlets are filled across the entire cross section during flow, while in the case of the larger outlets there is very frequently a void near the bottom.

C.4.6.3 When measuring the pitot pressure of a stream of practically uniform velocity, the orifice in the pitot tube is held downstream approximately one-half the diameter of the hydrant outlet or nozzle opening, and in the center of the stream.

C.4.6.4 The center line of the orifice should be at right angles to the plane of the face of the hydrant outlet.

C.4.6.5 The air chamber on the pitot tube should be kept elevated.

C.4.6.6 Pitot readings of less than 10 psi (0.7 bar) and more than 30 psi (2.1 bar) should be avoided, if possible.

C.4.6.7 Opening additional hydrant outlets will aid in controlling the pitot reading.

C.4.6.8 With dry barrel hydrants, the hydrant valve should be wide open to minimize problems with underground drain valves.

C.4.6.9 With wet barrel hydrants, the valve for the flowing outlet should be wide open to give a more streamlined flow and a more accurate pitot reading. *(See Figure C.4.6.9.)*

C.4.7 Determination of Discharge.

C.4.7.1 At the hydrants used for flow during the test, the discharges from the open butts are determined from measurements of the diameter of the outlets flowed, the pitot pressure (velocity head) of the streams as indicated by the pitot gauge readings, and the coefficient of the outlet being flowed as determined from Figure C.4.7.1.

C.4.7.2 If flow tubes (stream straighteners) are being utilized, a coefficient of 0.95 is suggested unless the coefficient of the tube is known.

Δ **C.4.7.3** The formula used to compute the discharge, Q, in gpm (L/min) from these measurements is as shown in Equations C.4.7.3a and C.4.7.3b.

[C.4.7.3a]

$$Q = 29.84cd^2\sqrt{p}$$

where:
c = coefficient of discharge *(see Figure C.4.7.1)*
d = diameter of the outlet in inches
p = pitot pressure (velocity head) in psi

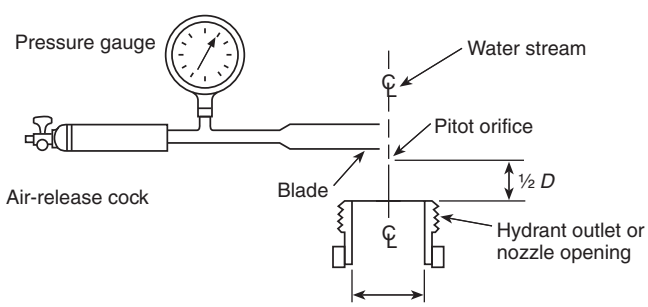

FIGURE C.4.6.9 Pitot Tube Position.

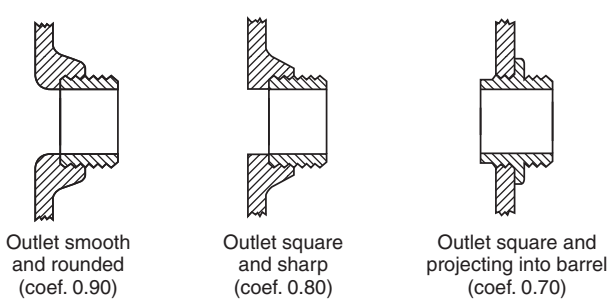

FIGURE C.4.7.1 Three General Types of Hydrant Outlets and Their Coefficients of Discharge.

[C.4.7.3b]

$$Q_M = 0.0666cd^2\sqrt{p_M}$$

where:
Q_M = flow (L/min)
p_M = pressure (kPa or bar)

[**291:**4.7.3]

C.4.8 Use of Pumper Outlets.

C.4.8.1 If it is necessary to use a pumper outlet, and flow tubes (stream straighteners) are not available, the best results are obtained with the pitot pressure (velocity head) maintained between 5 psi and 10 psi (0.34 bar and 0.7 bar).

C.4.8.2 For pumper outlets, the approximate discharge can be computed from Equation C.4.7.3 using the pitot pressure (velocity head) at the center of the stream and multiplying the result by one of the coefficients in Table C.4.8.2, depending upon the pitot pressure (velocity head).

C.4.8.3 These coefficients are applied in addition to the coefficient in Equation C.4.7.3 and are for average-type hydrants.

C.4.9 Determination of Discharge Without a Pitot.

C.4.9.1 If a pitot tube is not available for use to measure the hydrant discharge, a 50 or 60 psi (3.4 or 4.1 bar) gauge tapped into a hydrant cap can be used.

C.4.9.2 The hydrant cap with gauge attached is placed on one outlet, and the flow is allowed to take place through the other outlet at the same elevation.

C.4.9.3 The readings obtained from a gauge so located, and the readings obtained from a gauge on a pitot tube held in the stream, are approximately the same.

C.4.10 Calculation Results.

C.4.10.1 The discharge in gpm (L/min) for each outlet flowed is obtained from Table C.4.10.1(a) and Table C.4.10.1(b) or by the use of Equations C.4.7.3a and C.4.7.3b.

C.4.10.1.1 If more than one outlet is used, the discharges from all are added to obtain the total discharge.

Table C.4.8.2 Pumper Outlet Coefficients

Pitot Pressure (Velocity Head)		
psi	**bar**	**Coefficient**
2	0.14	0.97
3	0.21	0.92
4	0.28	0.89
5	0.35	0.86
6	0.41	0.84
7 and over	0.48 and over	0.83

Δ Table C.4.10.1(a) Theoretical Discharge Through Circular Orifices (U.S. Gallons of Water per Minute)

Pitot Pressure* (psi)	Feet†	Velocity Discharge (ft/sec)	Orifice Size (in.)											
			2	2.25	2.375	2.5	2.625	2.75	3	3.25	3.5	3.75	4	4.5
1	2.31	12.2	119	151	168	187	206	226	269	315	366	420	477	604
2	4.61	17.25	169	214	238	264	291	319	380	446	517	593	675	855
3	6.92	21.13	207	262	292	323	356	391	465	546	633	727	827	1047
4	9.23	24.39	239	302	337	373	411	451	537	630	731	839	955	1209
5	11.54	27.26	267	338	376	417	460	505	601	705	817	938	1068	1351
6	13.84	29.87	292	370	412	457	504	553	658	772	895	1028	1169	1480
7	16.15	32.26	316	400	445	493	544	597	711	834	967	1110	1263	1599
8	18.46	34.49	338	427	476	528	582	638	760	891	1034	1187	1350	1709
9	20.76	36.58	358	453	505	560	617	677	806	946	1097	1259	1432	1813
10	23.07	38.56	377	478	532	590	650	714	849	997	1156	1327	1510	1911
11	25.38	40.45	396	501	558	619	682	748	891	1045	1212	1392	1583	2004
12	27.68	42.24	413	523	583	646	712	782	930	1092	1266	1454	1654	2093
13	29.99	43.97	430	545	607	672	741	814	968	1136	1318	1513	1721	2179
14	32.3	45.63	447	565	630	698	769	844	1005	1179	1368	1570	1786	2261
15	34.61	47.22	462	585	652	722	796	874	1040	1221	1416	1625	1849	2340
16	36.91	48.78	477	604	673	746	822	903	1074	1261	1462	1679	1910	2417
17	39.22	50.28	492	623	694	769	848	930	1107	1300	1507	1730	1969	2491
18	41.53	51.73	506	641	714	791	872	957	1139	1337	1551	1780	2026	2564
19	43.83	53.15	520	658	734	813	896	984	1171	1374	1593	1829	2081	2634
20	46.14	54.54	534	676	753	834	920	1009	1201	1410	1635	1877	2135	2702
22	50.75	57.19	560	709	789	875	964	1058	1260	1478	1715	1968	2239	2834
24	55.37	59.74	585	740	825	914	1007	1106	1316	1544	1791	2056	2339	2960
26	59.98	62.18	609	770	858	951	1048	1151	1369	1607	1864	2140	2434	3081
28	64.6	64.52	632	799	891	987	1088	1194	1421	1668	1934	2220	2526	3197
30	69.21	66.79	654	827	922	1022	1126	1236	1471	1726	2002	2298	2615	3310
32	73.82	68.98	675	855	952	1055	1163	1277	1519	1783	2068	2374	2701	3418
34	78.44	71.1	696	881	981	1087	1199	1316	1566	1838	2131	2447	2784	3523
36	83.05	73.16	716	906	1010	1119	1234	1354	1611	1891	2193	2518	2865	3626
38	87.67	75.17	736	931	1038	1150	1268	1391	1656	1943	2253	2587	2943	3725
40	92.28	77.11	755	955	1065	1180	1300	1427	1699	1993	2312	2654	3020	3822
42	96.89	79.03	774	979	1091	1209	1333	1462	1740	2043	2369	2719	3094	3916
44	101.51	80.88	792	1002	1116	1237	1364	1497	1781	2091	2425	2783	3167	4008
46	106.12	82.7	810	1025	1142	1265	1395	1531	1821	2138	2479	2846	3238	4098
48	110.74	84.48	827	1047	1166	1292	1425	1563	1861	2184	2533	2907	3308	4186
50	115.35	86.22	844	1068	1190	1319	1454	1596	1899	2229	2585	2967	3376	4273
52	119.96	87.93	861	1089	1214	1345	1483	1627	1937	2273	2636	3026	3443	4357
54	124.58	89.61	877	1110	1237	1370	1511	1658	1974	2316	2686	3084	3508	4440
56	129.19	91.2	893	1130	1260	1396	1539	1689	2010	2359	2735	3140	3573	4522
58	133.81	92.87	909	1150	1282	1420	1566	1719	2045	2400	2784	3196	3636	4602
60	138.42	94.45	925	1170	1304	1445	1593	1748	2080	2441	2831	3250	3698	4681
62	143.03	96.01	940	1189	1325	1469	1619	1777	2115	2482	2878	3304	3759	4758
64	147.65	97.55	955	1209	1347	1492	1645	1805	2148	2521	2924	3357	3820	4834
66	152.26	99.07	970	1227	1367	1515	1670	1833	2182	2561	2970	3409	3879	4909
68	156.88	100.55	984	1246	1388	1538	1696	1861	2215	2599	3014	3460	3937	4983
70	161.49	102.03	999	1264	1408	1560	1720	1888	2247	2637	3058	3511	3995	5056
72	166.1	103.47	1013	1282	1428	1583	1745	1915	2279	2674	3102	3561	4051	5127
74	170.72	104.9	1027	1300	1448	1604	1769	1941	2310	2711	3144	3610	4107	5198
76	175.33	106.3	1041	1317	1467	1626	1793	1967	2341	2748	3187	3658	4162	5268
78	179.95	107.69	1054	1334	1487	1647	1816	1993	2372	2784	3228	3706	4217	5337
80	184.56	109.08	1068	1351	1505	1668	1839	2018	2402	2819	3269	3753	4270	5405
82	189.17	110.42	1081	1368	1524	1689	1862	2043	2432	2854	3310	3800	4323	5472
84	193.79	111.76	1094	1385	1543	1709	1885	2068	2461	2889	3350	3846	4376	5538
86	198.4	113.08	1107	1401	1561	1730	1907	2093	2491	2923	3390	3891	4428	5604
88	203.02	114.39	1120	1417	1579	1750	1929	2117	2519	2957	3429	3936	4479	5668
90	207.63	115.68	1132	1433	1597	1769	1951	2141	2548	2990	3468	3981	4529	5733

(continues)

Δ **Table C.4.10.1(a)** ***Continued***

Pitot Pressure* (psi)	Feet†	Velocity Discharge (ft/sec)	Orifice Size (in.)											
			2	2.25	2.375	2.5	2.625	2.75	3	3.25	3.5	3.75	4	4.5
92	212.24	116.96	1145	1449	1614	1789	1972	2165	2576	3023	3506	4025	4579	5796
94	216.86	118.23	1157	1465	1632	1808	1994	2188	2604	3056	3544	4068	4629	5859
96	221.47	119.48	1169	1480	1649	1827	2015	2211	2631	3088	3582	4111	4678	5921
98	226.09	120.71	1182	1495	1666	1846	2035	2234	2659	3120	3619	4154	4726	5982
100	230.7	121.94	1194	1511	1683	1865	2056	2257	2686	3152	3655	4196	4774	6043
102	235.31	123.15	1205	1526	1700	1884	2077	2279	2712	3183	3692	4238	4822	6103
104	239.93	124.35	1217	1541	1716	1902	2097	2301	2739	3214	3728	4279	4869	6162
106	244.54	125.55	1229	1555	1733	1920	2117	2323	2765	3245	3763	4320	4916	6221
108	249.16	126.73	1240	1570	1749	1938	2137	2345	2791	3275	3799	4361	4962	6280
110	253.77	127.89	1252	1584	1765	1956	2157	2367	2817	3306	3834	4401	5007	6338
112	258.38	129.05	1263	1599	1781	1974	2176	2388	2842	3336	3869	4441	5053	6395
114	263	130.2	1274	1613	1797	1991	2195	2409	2867	3365	3903	4480	5098	6452
116	267.61	131.33	1286	1627	1813	2009	2215	2430	2892	3395	3937	4519	5142	6508
118	272.23	132.46	1297	1641	1828	2026	2234	2451	2917	3424	3971	4558	5186	6564
120	276.84	133.57	1308	1655	1844	2043	2252	2472	2942	3453	4004	4597	5230	6619
122	281.45	134.69	1318	1669	1859	2060	2271	2493	2966	3481	4038	4635	5273	6674
124	286.07	135.79	1329	1682	1874	2077	2290	2513	2991	3510	4070	4673	5317	6729
126	290.68	136.88	1340	1696	1889	2093	2308	2533	3015	3538	4103	4710	5359	6783
128	295.3	137.96	1350	1709	1904	2110	2326	2553	3038	3566	4136	4748	5402	6836
130	299.91	139.03	1361	1722	1919	2126	2344	2573	3062	3594	4168	4784	5444	6890
132	304.52	140.1	1371	1736	1934	2143	2362	2593	3086	3621	4200	4821	5485	6942
134	309.14	141.16	1382	1749	1948	2159	2380	2612	3109	3649	4231	4858	5527	6995
136	313.75	142.21	1392	1762	1963	2175	2398	2632	3132	3676	4263	4894	5568	7047

Notes:

(1) This table is computed from the formula: $Q = 29.84cd^2\sqrt{p}$ with $c = 1.00$. The theoretical discharge of seawater, as from fireboat nozzles, can be found by subtracting 1 percent from the figures in Table C.4.10.2.1, or from the formula:

$$Q = 29.84cd^2\sqrt{p}$$

(2) Appropriate coefficient should be applied where it is read from hydrant outlet. Where more accurate results are required, a coefficient appropriate on the particular nozzle must be selected and applied to the figures of the table. The discharge from circular openings of sizes other than those in the table can readily be computed by applying the principle that quantity discharged under a given head varies as the square of the diameter of the opening.

C.4.10.1.2 The formula that is generally used to compute the discharge at the specified residual pressure or for any desired pressure drop is Equation C.4.10.1.2:

[C.4.10.1.2]

$$Q_R = Q_F \times \frac{h_r^{0.54}}{h_f^{0.54}}$$

where:
Q_R = flow predicted at desired residual pressure
Q_F = total flow measured during test
h_r = pressure drop to desired residual pressure
h_f = pressure drop measured during test

C.4.10.1.3 In Equation C.4.10.1.2, any units of discharge or pressure drop can be used as long as the same units are used for each value of the same variable.

C.4.10.1.4 In other words, if Q_R is expressed in gpm, Q_F must be in gpm, and if h_r is expressed in psi, h_f must be expressed in psi.

C.4.10.1.5 These are the units that are normally used in applying Equation C.4.10.1.2 to fire flow test computations.

C.4.10.2 Discharge Calculations from Table.

C.4.10.2.1 One means of solving this equation without the use of logarithms is by using Table C.4.10.2.1, which gives the values of the 0.54 power of the numbers from 1 to 175.

C.4.10.2.2 If the values of h_f, h_r, and Q_F, are known, the values of $h_f^{0.54}$ and $h_r^{0.54}$ can be read from Table C.4.10.2.1 and Equation C.4.10.1.2 solved for Q_R.

C.4.10.2.3 Results are usually carried to the nearest 100 gpm (380 L/min) for discharges of 1000 gpm (3800 L/min) or more, and to the nearest 50 gpm (190 L/min) for smaller discharges, which is as close as can be justified by the degree of accuracy of the field observations.

C.4.10.2.4 The values of $h_r^{0.54}$ and $h_f^{0.54}$ (determined from the table) and the value of Q_F, are inserted in Equation C.4.10.1.2 and the equation solved for Q_R.

N **Table C.4.10.1(b) Theoretical Discharge Through Circular Orifices (Liters of Water per Minute)**

Pitot Pressure (kPa)	Pitot Pressure (bar)	Meters (m)	Velocity Discharge (m/sec)	Orifice Size (mm)											
				51	57	60	65	67	70	76	83	89	95	102	114
5	0.1	0.51	3.16	387	484	536	629	669	730	860	1026	1180	1344	1549	1935
10	0.1	1.02	4.47	548	684	758	890	945	1032	1216	1451	1668	1901	2191	2737
15	0.2	1.53	5.48	671	838	929	1090	1158	1264	1490	1777	2043	2328	2684	3352
20	0.2	2.04	6.33	775	968	1072	1258	1337	1459	1720	2052	2359	2688	3099	3871
25	0.3	2.55	7.07	866	1082	1199	1407	1495	1632	1923	2294	2638	3005	3465	4328
30	0.3	3.06	7.75	949	1185	1313	1541	1638	1787	2107	2513	2889	3292	3795	4741
35	0.4	3.57	8.37	1025	1280	1418	1665	1769	1931	2276	2714	3121	3556	4099	5121
40	0.4	4.08	8.95	1096	1369	1516	1780	1891	2064	2433	2902	3336	3801	4382	5474
45	0.5	4.59	9.49	1162	1452	1608	1888	2006	2189	2581	3078	3539	4032	4648	5806
50	0.5	5.1	10.00	1225	1530	1695	1990	2114	2308	2720	3244	3730	4250	4900	6120
55	0.6	5.61	10.49	1285	1605	1778	2087	2217	2420	2853	3403	3912	4458	5139	6419
60	0.6	6.12	10.96	1342	1676	1857	2180	2316	2528	2980	3554	4086	4656	5367	6704
65	0.7	6.63	11.41	1397	1745	1933	2269	2410	2631	3101	3699	4253	4846	5586	6978
70	0.7	7.14	11.84	1449	1810	2006	2354	2501	2730	3218	3839	4414	5029	5797	7242
75	0.8	7.65	12.25	1500	1874	2076	2437	2589	2826	3331	3973	4569	5205	6001	7496
80	0.8	8.16	12.65	1549	1935	2144	2517	2674	2919	3441	4104	4718	5376	6198	7742
85	0.9	8.67	13.04	1597	1995	2210	2594	2756	3009	3547	4230	4864	5542	6388	7980
90	0.9	9.18	13.42	1643	2053	2275	2669	2836	3096	3649	4353	5005	5702	6573	8211
95	1.0	9.69	13.79	1688	2109	2337	2743	2914	3181	3749	4472	5142	5858	6754	8436
100	1.0	10.2	14.15	1732	2164	2398	2814	2990	3263	3847	4588	5275	6011	6929	8655
105	1.1	10.71	14.50	1775	2217	2457	2883	3064	3344	3942	4701	5406	6159	7100	8869
110	1.1	11.22	14.84	1817	2269	2515	2951	3136	3423	4035	4812	5533	6304	7267	9078
115	1.2	11.73	15.17	1858	2320	2571	3018	3206	3500	4125	4920	5657	6446	7431	9282
120	1.2	12.24	15.50	1898	2370	2626	3082	3275	3575	4214	5026	5779	6584	7590	9481
125	1.3	12.75	15.82	1937	2419	2681	3146	3343	3649	4301	5130	5898	6720	7747	9677
130	1.3	13.26	16.13	1975	2467	2734	3208	3409	3721	4386	5231	6015	6853	7900	9869
140	1.4	14.28	16.74	2050	2560	2837	3329	3537	3861	4552	5429	6242	7112	8199	10241
150	1.5	15.3	17.33	2122	2650	2936	3446	3662	3997	4711	5619	6461	7362	8486	10601
160	1.6	16.32	17.89	2191	2737	3033	3559	3782	4128	4866	5804	6673	7603	8765	10948
170	1.7	17.34	18.44	2259	2821	3126	3669	3898	4255	5016	5982	6878	7837	9034	11285
180	1.8	18.36	18.98	2324	2903	3217	3775	4011	4378	5161	6156	7078	8064	9296	11612
190	1.9	19.38	19.50	2388	2983	3305	3879	4121	4498	5302	6324	7272	8285	9551	11931
200	2.0	20.4	20.01	2450	3060	3391	3979	4228	4615	5440	6489	7461	8500	9799	12240
210	2.1	21.42	20.50	2510	3136	3474	4078	4332	4729	5575	6649	7645	8710	10041	12543
220	2.2	22.44	20.98	2569	3209	3556	4174	4434	4840	5706	6805	7825	8915	10277	12838
230	2.3	23.46	21.45	2627	3282	3636	4267	4534	4949	5834	6958	8001	9116	10508	13126
240	2.4	24.48	21.92	2684	3352	3714	4359	4632	5056	5959	7108	8173	9312	10734	13409
250	2.5	25.5	22.37	2739	3421	3791	4449	4727	5160	6082	7254	8341	9504	10956	13685
260	2.6	26.52	22.81	2793	3489	3866	4537	4821	5262	6203	7398	8506	9692	11173	13956
270	2.7	27.54	23.25	2846	3556	3940	4624	4913	5362	6321	7539	8668	9877	11386	14222
285	2.9	29.07	23.88	2924	3653	4048	4750	5047	5509	6494	7746	8906	10147	11698	14612
300	3.0	30.6	24.50	3000	3748	4153	4874	5178	5652	6663	7947	9137	10411	12001	14991
315	3.2	32.13	25.11	3074	3840	4255	4994	5306	5792	6827	8143	9363	10668	12298	15362
330	3.3	33.66	25.70	3147	3931	4355	5112	5431	5928	6988	8335	9583	10919	12587	15723
345	3.5	35.19	26.28	3218	4019	4453	5226	5553	6061	7145	8522	9799	11164	12870	16077
360	3.6	36.72	26.84	3287	4106	4549	5339	5673	6192	7299	8705	10009	11404	13147	16422
375	3.8	38.25	27.39	3355	4190	4643	5449	5789	6320	7449	8885	10216	11640	13418	16761
390	3.9	39.78	27.94	3421	4273	4735	5557	5904	6445	7597	9061	10418	11870	13684	17093
405	4.1	41.31	28.47	3486	4355	4825	5663	6017	6567	7742	9233	10617	12096	13944	17419
420	4.2	42.84	28.99	3550	4435	4914	5767	6127	6688	7884	9403	10811	12318	14200	17738
435	4.4	44.37	29.50	3613	4513	5001	5869	6235	6806	8023	9569	11003	12536	14452	18052
450	4.5	45.9	30.01	3675	4590	5086	5969	6342	6923	8160	9733	11191	12751	14699	18361
465	4.7	47.43	30.51	3735	4666	5170	6068	6447	7037	8295	9894	11376	12961	14942	18664
480	4.8	48.96	30.99	3795	4741	5253	6165	6550	7150	8428	10052	11558	13169	15181	18963
495	5.0	50.49	31.47	3854	4814	5334	6260	6652	7261	8559	10208	11737	13373	15416	19257
510	5.1	52.02	31.95	3912	4887	5415	6355	6752	7370	8687	10361	11913	13574	15648	19547
525	5.3	53.55	32.41	3969	4958	5494	6447	6850	7477	8814	10513	12087	13772	15876	19832
540	5.4	55.08	32.87	4025	5028	5572	6539	6947	7583	8939	10662	12259	13967	16102	20113
555	5.6	56.61	33.33	4081	5098	5648	6629	7043	7688	9062	10809	12428	14160	16324	20391
570	5.7	58.14	33.77	4136	5166	5724	6718	7138	7791	9184	10954	12595	14350	16543	20664

(continues)

N **Table C.4.10.1(b)** ***Continued***

Pitot Pressure (kPa)	Pitot Pressure (bar)	Meters (m)	Velocity Discharge (m/sec)	Orifice Size (mm)											
				51	57	60	65	67	70	76	83	89	95	102	114
585	5.9	59.67	34.22	4190	5234	5799	6806	7231	7893	9304	11097	12759	14538	16759	20934
600	6.0	61.2	34.65	4243	5300	5873	6892	7323	7994	9423	11238	12922	14723	16973	21201
615	6.2	62.73	35.08	4296	5366	5946	6978	7414	8093	9540	11378	13083	14906	17184	21465
630	6.3	64.26	35.51	4348	5431	6018	7063	7504	8191	9655	11516	13241	15087	17392	21725
645	6.5	65.79	35.93	4399	5495	6089	7146	7593	8288	9770	11652	13398	15265	17598	21982
660	6.6	67.32	36.34	4450	5559	6160	7229	7681	8384	9883	11787	13553	15442	17801	22236
675	6.8	68.85	36.75	4501	5622	6229	7311	7767	8479	9994	11920	13706	15616	18002	22487
690	6.9	70.38	37.16	4550	5684	6298	7391	7853	8572	10105	12052	13857	15789	18201	22736
705	7.1	71.91	37.56	4599	5745	6366	7471	7938	8665	10214	12182	14007	15959	18398	22982
720	7.2	73.44	37.96	4648	5806	6433	7550	8022	8757	10322	12311	14155	16128	18593	23225
735	7.4	74.97	38.35	4696	5866	6500	7629	8105	8847	10429	12439	14302	16295	18785	23465
750	7.5	76.5	38.74	4744	5926	6566	7706	8188	8937	10535	12565	14447	16461	18976	23704
765	7.7	78.03	39.13	4791	5985	6631	7783	8269	9026	10640	12690	14591	16625	19165	23939
780	7.8	79.56	39.51	4838	6043	6696	7859	8350	9114	10744	12814	14733	16787	19352	24173
795	8.0	81.09	39.89	4884	6101	6760	7934	8430	9201	10846	12936	14874	16947	19537	24404
810	8.1	82.62	40.26	4930	6158	6824	8008	8509	9288	10948	13058	15014	17107	19720	24634
825	8.3	84.15	40.63	4976	6215	6887	8082	8587	9373	11049	13178	15152	17264	19902	24861
840	8.4	85.68	41.00	5021	6271	6949	8155	8665	9458	11149	13298	15290	17421	20082	25086
855	8.6	87.21	41.36	5065	6327	7011	8228	8742	9542	11248	13416	15425	17575	20261	25309
870	8.7	88.74	41.73	5109	6382	7072	8300	8818	9626	11346	13533	15560	17729	20438	25530
885	8.9	90.27	42.08	5153	6437	7133	8371	8894	9708	11444	13649	15694	17881	20613	25749
900	9.0	91.8	42.44	5197	6492	7193	8442	8969	9790	11540	13764	15826	18032	20787	25966
915	9.2	93.33	42.79	5240	6545	7252	8512	9043	9871	11636	13878	15957	18182	20960	26181
930	9.3	94.86	43.14	5283	6599	7312	8581	9117	9952	11731	13992	16088	18330	21131	26395
945	9.5	96.39	43.49	5325	6652	7370	8650	9191	10032	11825	14104	16217	18477	21301	26607

Notes:

(1) This table is computed from the formula $Q_M = 0.0666cd^2\sqrt{p_M}$, with $c = 1.00$. The theoretical discharge of seawater, as from fireboat nozzles, can be found by subtracting 1 percent from the figures in Table C.4.10.2.1, or from the formula $Q_M = 0.065cd^2\sqrt{p_M}$.

(2) Appropriate coefficient should be applied where it is read from the hydrant outlet. Where more accurate results are required, a coefficient appropriate on the particular nozzle must be selected and applied to the figures of the table. The discharge from circular openings of sizes other than those in the table can readily be computed by applying the principle that quantity discharged under a given head varies as the square of the diameter of the opening. [**291:**4.10.1]

C.4.11 Data Sheet.

C.4.11.1 The data secured during the testing of hydrants for uniform marking can be valuable for other purposes.

C.4.11.2 With this in mind, it is suggested that the form shown in Figure C.4.11.2 be used to record information that is taken.

C.4.11.3 The back of the form should include a location sketch.

C.4.11.4 Results of the flow test should be indicated on a hydraulic graph, such as the one shown in Figure C.4.11.4.

C.4.11.5 When the tests are complete, the forms should be filed for future reference by interested parties.

C.4.12 System Corrections.

C.4.12.1 It must be remembered that flow test results show the strength of the distribution system and do not necessarily indicate the degree of adequacy of the entire waterworks system.

C.4.12.2 Consider a system supplied by pumps at one location and having no elevated storage.

C.4.12.3 If the pressure at the pump station drops during the test, it is an indication that the distribution system is capable of delivering more than the pumps can deliver at their normal operating pressure.

C.4.12.4 It is necessary to use a value for the drop in pressure for the test that is equal to the actual drop obtained in the field during the test, minus the drop in discharge pressure at the pumping station.

C.4.12.5 If sufficient pumping capacity is available at the station and the discharge pressure could be maintained by operating additional pumps, the water system as a whole could deliver the computed quantity.

Δ Table C.4.10.2.1 Values of *h* to the 0.54 Power

h	$h^{0.54}$	h	$h^{0.54}$	h	$h^{0.54}$	h	$h^{0.54}$	h	$h^{0.54}$
1	1.00	36	6.93	71	9.99	106	12.41	141	14.47
2	1.45	37	7.03	72	10.07	107	12.47	142	14.53
3	1.81	38	7.13	73	10.14	108	12.53	143	14.58
4	2.11	39	7.23	74	10.22	109	12.60	144	14.64
5	2.39	40	7.33	75	10.29	110	12.66	145	14.69
6	2.63	41	7.43	76	10.37	111	12.72	146	14.75
7	2.86	42	7.53	77	10.44	112	12.78	147	14.80
8	3.07	43	7.62	78	10.51	113	12.84	148	14.86
9	3.28	44	7.72	79	10.59	114	12.90	149	14.91
10	3.47	45	7.81	80	10.66	115	12.96	150	14.97
11	3.65	46	7.91	81	10.73	116	13.03	151	15.02
12	3.83	47	8.00	82	10.80	117	13.09	152	15.07
13	4.00	48	8.09	83	10.87	118	13.15	153	15.13
14	4.16	49	8.18	84	10.94	119	13.21	154	15.18
15	4.32	50	8.27	85	11.01	120	13.27	155	15.23
16	4.48	51	8.36	86	11.08	121	13.33	156	15.29
17	4.62	52	8.44	87	11.15	122	13.39	157	15.34
18	4.76	53	8.53	88	11.22	123	13.44	158	15.39
19	4.90	54	8.62	89	11.29	124	13.50	159	15.44
20	5.04	55	8.71	90	11.36	125	13.56	160	15.50
21	5.18	56	8.79	91	11.43	126	13.62	161	15.55
22	5.31	57	8.88	92	11.49	127	13.68	162	15.60
23	5.44	58	8.96	93	11.56	128	13.74	163	15.65
24	5.56	59	9.04	94	11.63	129	13.80	164	15.70
25	5.69	60	9.12	95	11.69	130	13.85	165	15.76
26	5.81	61	9.21	96	11.76	131	13.91	166	15.81
27	5.93	62	9.29	97	11.83	132	13.97	167	15.86
28	6.05	63	9.37	98	11.89	133	14.02	168	15.91
29	6.16	64	9.45	99	11.96	134	14.08	169	15.96
30	6.28	65	9.53	100	12.02	135	14.14	170	16.01
31	6.39	66	9.61	101	12.09	136	14.19	171	16.06
32	6.50	67	9.69	102	12.15	137	14.25	172	16.11
33	6.61	68	9.76	103	12.22	138	14.31	173	16.16
34	6.71	69	9.84	104	12.28	139	14.36	174	16.21
35	6.82	70	9.92	105	12.34	140	14.42	175	16.26

Hydrant Flow Test Report

Location _____ Date _____

Test made by _____ Time _____

Representative of _____

Witness _____

State purpose of test _____

_____

Consumption rate during test _____

If pumps affect test, indicate pumps operating _____

Flow hydrants: _____ A_1 A_2 A_3 A_4

Size nozzle _____

Pitot reading _____

Discharge coefficient _____ Total GPM

GPM _____

Static B _____ psi Residual B _____ psi

Projected results @20 psi Residual ____ gpm; or @ ___ psi Residual ___ gpm

Remarks: _____

_____

_____

_____

_____

Location map: Show line sizes and distance to next cross-connected line. Show valves and hydrant branch size. Indicate north. Show flowing hydrants – Label A_1, A_2, A_3, A_4. Show location of static and residual – Label B.

Indicate B Hydrant _____ Sprinkler _____ Other (identify) _____

© 2018 National Fire Protection Association NFPA 24

Δ **FIGURE C.4.11.2 Sample Report of a Hydrant Flow Test.**

C.4.12.6 If, however, additional pumping units are not available, the distribution system would be capable of delivering the computed quantity, but the water system as a whole would be limited by the pumping capacity.

C.4.12.7 The portion of the pressure drop for which a correction can be made for tests on systems with storage is generally estimated on the basis of a study of all the tests made and the pressure drops observed on the recording gauge at the station for each.

C.4.12.8 The corrections could vary from very substantial portions of the observed pressure drops for tests near the pumping station, to zero for tests remote from the station.

C.4.13 Public Hydrant Testing and Flushing.

C.4.13.1 Public fire hydrants should be flow-tested every 5 years to verify capacity and marking of the hydrant. When flow test data are needed, such data should not be more than 5 years old since conditions in the piping and system demands can change. It is not the intent of C.4.13.1 to require routine 5-year testing of each hydrant if there is no immediate need for flow test data or if test data less than 5 years old are available from an adjacent hydrant on the same grid.

C.4.13.2 Public fire hydrants should be flushed at least annually to verify operation, address repairs, and verify reliability.

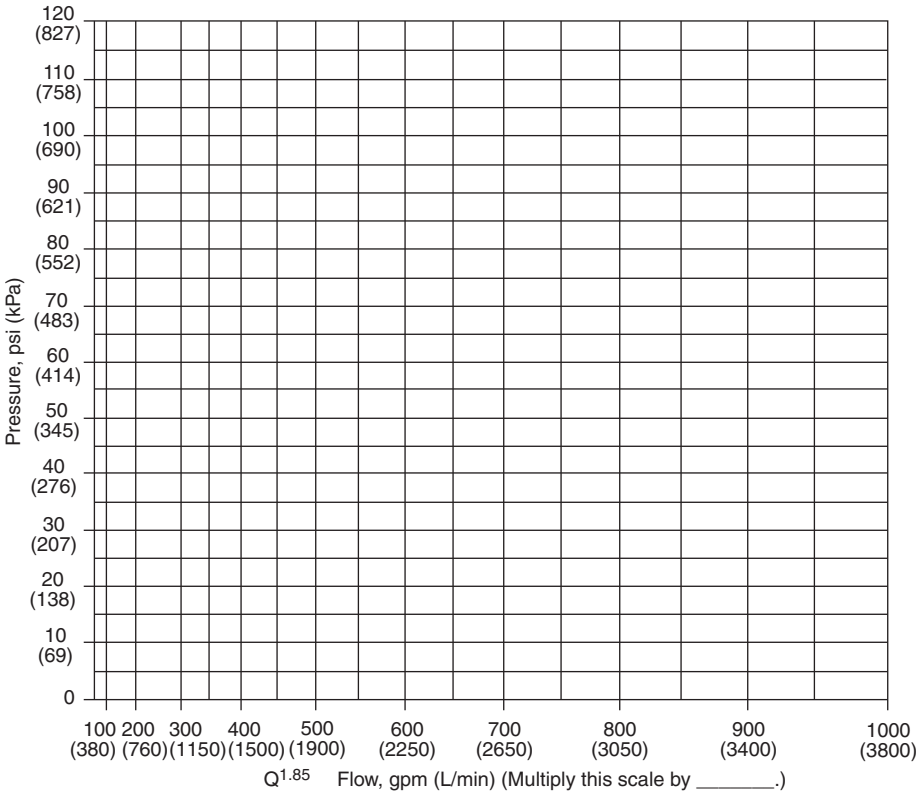

Δ **FIGURE C.4.11.4 Sample Graph Sheet. [291:Figure 4.11.4]**

Annex D Recommended Practice for Marking of Hydrants

This annex is not a part of the requirements of this NFPA document but is included for informational purposes only.

D.1 Annex D was developed based upon the procedures contained in NFPA 291. For additional information on marking of hydrants, see NFPA 291, 2019 Edition, Chapter 5, "Marking of Hydrants."

D.1.1 Scope. The scope of this annex is to provide guidance on marking of hydrants.

D.1.2 Purpose. Fire flow tests are conducted on water distribution systems to determine the rate of flow available at various locations for fire-fighting purposes.

D.1.3 Application.

D.1.3.1 A certain residual pressure in the mains is specified at which the rate of flow should be available.

D.1.3.2 Additional benefit is derived from fire flow tests by the indication of possible deficiencies, such as tuberculation of piping or closed valves or both, which could be corrected to ensure adequate fire flows as needed.

D.1.4 Units. Metric units of measurement in this recommended practice are in accordance with the modernized metric system known as the International System of Units (SI). Two units (liter and bar), outside of but recognized by SI, are commonly used in international fire protection. These units are listed in Table D.1.4 with conversion factors.

Δ **Table D.1.4 SI Units and Conversion Factors**

Unit Name	Unit Symbol	Conversion Factor
Liter	L	1 gal = 3.785 L
Liter per minute per square meter	$(L/min)/m^2$	1 gpm ft^2 = $(40.746\ L/min)/m^2$
Cubic decimeter	dm^3	1 gal = 3.785 dm^3
Pascal	Pa	1 psi = 6894.757 Pa
Bar	bar	1 psi = 0.0689 bar
Bar	bar	1 bar = 10^5 Pa

Note: For additional conversions and information, see IEEE/ASTM-SI-10.

D.1.4.1 If a value for measurement as given in this recommended practice is followed by an equivalent value in other units, the first value stated is to be regarded as the recommendation. A given equivalent value might be approximate.

D.2 Referenced Publications.

D.2.1 General. The documents or portions thereof listed in this section are referenced within this annex and should be considered part of the recommendations of this document.

D.2.2 NFPA Publications. (Reserved)

D.2.3 Other Publications.

D.2.3.1 ASTM Publications. ASTM International, 100 Barr Harbor Drive, P.O. Box C700, West Conshohocken, PA 19428-2959.

IEEE/ASTM-SI-10, *Standard for Use of the International System of Units (SI): The Modern Metric System*, 2010.

D.3 Definitions.

D.3.1 General. The definitions contained in this annex apply to the terms used in this annex practice. Where terms are not included, common usage of the terms applies.

D.3.2 NFPA Official Definitions.

D.3.2.1 Authority Having Jurisdiction (AHJ). An organization, office, or individual responsible for enforcing the requirements of a code or standard, or for approving equipment, materials, an installation, or a procedure. *(See A.3.2.2.)*

D.3.2.2 Listed. Equipment, materials, or services included in a list published by an organization that is acceptable to the authority having jurisdiction and concerned with evaluation of products or services, that maintains periodic inspection of production of listed equipment or materials or periodic evaluation of services, and whose listing states that either the equipment, material, or service meets appropriate designated standards or has been tested and found suitable for a specified purpose. *(See A.3.2.4.)*

D.3.2.3 Should. Indicates a recommendation or that which is advised but not required.

D.3.3 General Definitions.

D.3.3.1 Rated Capacity. The flow available from a hydrant at the designated residual pressure (rated pressure), either measured or calculated.

D.4 Classification of Hydrants. Hydrants should be classified in accordance with their rated capacities [at 20 psi (1.4 bar) residual pressure or other designated value] as follows:

(1) Class AA — Rated capacity of 1500 gpm (5700 L/min) or greater
(2) Class A — Rated capacity of 1000 to 1499 gpm (3800 to 5700 L/min)
(3) Class B — Rated capacity of 500 to 999 gpm (1900 to 3800 L/min)
(4) Class C — Rated capacity of less than 500 gpm (1900 L/min)

D.5 Marking of Hydrants.

D.5.1 Public Hydrants.

D.5.1.1 All barrels are to be chrome yellow except in cases where another color has already been adopted.

D.5.1.2 The tops and nozzle caps should be painted with the following capacity-indicating color scheme to provide simplicity and consistency with colors used in signal work for safety, danger, and intermediate condition:

(1) Class AA — light blue
(2) Class A — green
(3) Class B — orange
(4) Class C — red

D.5.1.3 For rapid identification at night, it is recommended that the capacity colors be of a reflective-type paint.

D.5.1.4 Hydrants rated at less than 20 psi (1.4 bar) should have the rated pressure stenciled in black on the hydrant top.

D.5.1.5 In addition to the painted top and nozzle caps, it can be advantageous to stencil the rated capacity of high-volume hydrants on the top.

D.5.1.6 The classification and marking of hydrants provided for in this chapter anticipate determination based on individual flow test.

D.5.1.7 Where a group of hydrants can be used at the time of a fire, some special marking designating group-flow capacity might be desirable.

D.5.1.8 Marking on private hydrants within private enclosures is to be done at the owner's discretion.

D.5.1.9 When private hydrants are located on public streets, they should be painted red, or another color that distinguishes them from public hydrants.

D.5.2 Permanently Inoperative Hydrants. Fire hydrants that are permanently inoperative or unusable should be removed.

D.5.3 Temporarily Inoperative Hydrants. Fire hydrants that are temporarily inoperative or unusable should be wrapped or otherwise provided with temporary indication of their condition.

D.5.4 Flush Hydrants. Location markers for flush hydrants should carry the same background color as stated above for class indication, with such other data stenciled thereon as deemed necessary.

D.5.5 Private Hydrants.

D.5.5.1 Marking on private hydrants within private enclosures is to be at the owner's discretion.

D.5.5.2 When private hydrants are located on public streets, they should be painted red or another color to distinguish them from public hydrants.

Annex E Informational References

E.1 Referenced Publications. The documents or portions thereof listed in this annex are referenced within the informational sections of this standard and are not part of the requirements of this document unless also listed in Chapter 2 for other reasons.

E.1.1 NFPA Publications. National Fire Protection Association, 1 Batterymarch Park, Quincy, MA 02169-7471.

NFPA 13, *Standard for the Installation of Sprinkler Systems*, 2019 edition.

NFPA 20, *Standard for the Installation of Stationary Pumps for Fire Protection*, 2019 edition.

NFPA 22, *Standard for Water Tanks for Private Fire Protection*, 2018 edition.

NFPA 70®, *National Electrical Code®*, 2017 edition.

NFPA 72®, *National Fire Alarm and Signaling Code®*, 2019 edition.

NFPA 291, *Recommended Practice for Fire Flow Testing and Marking of Hydrants*, 2019 edition.

NFPA 780, *Standard for the Installation of Lightning Protection Systems*, 2017 edition.

NFPA 1962, *Standard for the Care, Use, Inspection, Service Testing, and Replacement of Fire Hose, Couplings, Nozzles, and Fire Hose Appliances*, 2018 edition.

E.1.2 Other Publications.

E.1.2.1 ACPA Publications. American Concrete Pipe Association, 8445 Freeport Parkway, Suite 350, Irving, TX 75063.

Concrete Pipe Handbook.

E.1.2.2 ASME Publications. American Society of Mechanical Engineers, Two Park Avenue, New York, NY 10016-5990.

ASME B16.1, *Gray Iron Pipe Flanges and Flanged Fittings Classes 25, 125, and 250*, 2015.

E.1.2.3 ASTM Publications. ASTM International, 100 Barr Harbor Drive, P.O. Box C700, West Conshohocken, PA 19428-2959.

ASTM A126, *Standard Specification for Gray Iron Castings for Valves, Flanges and Pipe Fittings*, 2004, reapproved 2014.

ASTM A197/A197M, *Standard Specification for Cupola Malleable Iron*, 2000, reapproved 2015.

ASTM A307, *Standard Specification for Carbon Steel Bolts, Studs, Threaded Rod 60,000 PSI Tensile Strength*, 2014.

ASTM F2164, *Standard Practice for Field Leak Testing of Polyethylene (PE) and Crosslinked Polyethylene (PEX) Pressure Piping Systems Using Hydrostatic Pressure*, 2013.

ASTM SI10, *Standard for Use of the International System of Units (SI): The Modern Metric System*, 2010.

Δ **E.1.2.4 AWWA Publications.** American Water Works Association, 6666 West Quincy Avenue, Denver, CO 80235.

AWWA C104/A21.4, *Cement-Mortar Lining for Ductile-Iron Pipe and Fittings*, 2013.

AWWA C105/A21.5, *Polyethylene Encasement for Ductile-Iron Pipe Systems*, 2010.

AWWA C111/A21.11, *Rubber-Gasket Joints for Ductile-Iron Pressure Pipe and Fittings*, 2012.

AWWA C115/A21.15, *Flanged Ductile-Iron Pipe with Ductile-Iron or Gray Iron Threaded Flanges*, 2011.

AWWA C150/A21.50, *Thickness Design of Ductile-Iron Pipe*, 2014.

AWWA C205, *Cement-Mortar Protective Lining and Coating for Steel Water Pipe 4 in. and Larger — Shop Applied*, 2012.

AWWA C206, *Field Welding of Steel Water Pipe*, 2011.

AWWA C600, *Installation of Ductile Iron Water Mains and Their Appurtenances*, 2010.

AWWA C602, *Cement-Mortar Lining of Water Pipe Lines in Place, 4 in. (100 mm) and Larger*, 2011.

AWWA C606, *Grooved and Shouldered Joints*, 2015.

AWWA C900, *Polyvinyl Chloride (PVC) Pressure Pipe, 4 in. Through 12 in.(100 mm Through 300 mm),for Water Transmission And Distribution*, 2007, Errata, 2008.

AWWA C905, *Polyvinyl Chloride (PVC) Pressure Pipe and Fabricated Fittings 14 in. Through 48 in. (350 mm Through 1,200 mm) for Water Transmission and Distribution*, 2010, Erratum, 2013.

AWWA C906, *Standard for Polyethylene (PE) Pressure Pipe and Fittings, 4 in. (100 mm) Through 63 in. (1,650 mm), for Waterworks*, 2015.

AWWA M9, *Concrete Pressure Pipe*, 2008, Errata, 2013.

AWWA M11, *Steel Pipe — A Guide Design and Installation,* 4th edition, 2004, Errata, 2013.

AWWA M14, *Backflow Prevention and Cross-Connection Control, Recommended Practices*, 2015.

AWWA M23, *PVC Pipe — Design and Installation*, 2002.

AWWA M41, *Ductile-Iron Pipe and Fittings*, 2009.

AWWA M55, *PE Pipe — Design and Installation*, 2006.

Δ **E.1.2.5 Ductile Iron Pipe Research Association (DIPRA) Publications.** DIPRA, P.O. Box 19206, Golden, CO 80402.

Thrust Restraint Design for Ductile Iron Pipe, 2016.

N **E.1.2.6 EBAA Iron Publications.** EBAA Iron, Inc., P.O. Box 857, Eastland, TX 76448.

Thrust Restraint Design Equations and Tables for Ductile Iron and PVC Pipe.

E.2 Informational References. The following documents or portions thereof are listed here as informational resources only. They are not a part of the requirements of this document.

AWWA M17, *Installation, Field Testing, and Maintenance of Fire Hydrants*, 2006.

E.3 References for Extracts in Informational Sections.

NFPA 13, *Standard for the Installation of Sprinkler Systems,* 2019 edition.

NFPA 291, *Recommended Practice for Fire Flow Testing and Marking of Hydrants,* 2019 edition.

Index

Copyright © 2018 National Fire Protection Association. All Rights Reserved.

The copyright in this index is separate and distinct from the copyright in the document that it indexes. The licensing provisions set forth for the document are not applicable to this index. This index may not be reproduced in whole or in part by any means without the express written permission of NFPA.

-A-

Aboveground pipe, 10.2.3, Chap. 12, A.10.1.4
Protection of, 10.4.2.1.4, 12.2
Sizes, Chap. 13
Approved (definition), 3.2.1, A.3.2.1
Appurtenances, 1.1.1
Definition, 3.3.1
Authority having jurisdiction
Definition, 3.2.2, A.3.2.2, C.3.2.1, D.3.2.1
Role of, 4.2.2
Automatic drain valve (automatic drip or ball), 5.9.4
Definition, 3.3.2

-B-

Backfilling, 10.9, A.10.9.3
Backflow prevention devices, 5.4.2, 6.2.9(4), 6.5, 7.3.6(3), 10.10.2.5, A.5.4, A.5.4.2.1, A.6.2.9(4)
Bolts, 10.6.2.1.3, 10.6.2.4, 10.6.2.5, A.10.6.2.5
Bonding, 10.5, A.10.5.1
Buried pipe, *see* Underground pipe

-C-

Calculations, hydraulic, Chap. 11
Central station supervision, 6.7.2(1), B.2
Check valves, 5.4.2.1, 5.9.3.1, 6.2.2 to 6.2.4, 6.2.7(1), 6.8, 7.3.6, A.5.4, A.5.4.2.1, Fig. A.5.9(a), Fig. A.5.9(b), A.6.2.2.2, A.6.2.7(1)
City mains, *see* Public water systems
Clamps, pipe, 10.6.2.1.1, 10.6.2.4, 10.6.2.5, A.10.6.2.5
Combined service mains, 1.1.2
Concrete pipe, Table 10.1.1.1, A.10.1.1
Connections
Fire department, *see* Fire department connections
Hose, 8.1.4
Hydrants, 7.1.1.1, 7.1.1.2, 7.1.2, 7.1.3
From penstocks, rivers, lakes, or reservoirs, 5.8
Public water systems, *see* Public water systems
Signs on, 5.9.5.3 to 5.9.5.5, 5.9.5.7, A.5.9.5.3(2)
Underground pipe, fittings, and appurtenances, 10.3, A.10.3.1, A.10.3.5.3
Contamination of water supplies, protection against, 5.4.2, A.5.4, A.5.4.2.1
Contractor's Material and Test Certificate, 10.10.1
Control valves (shutoff valves), 5.9.3.2, 6.1.1, 6.2.1.1, 6.2.1.2, 6.2.2.1, 6.2.4 to 6.2.9, A.5.9.3.2.1, A.6.1.1.3, A.6.1.1.4, A.6.2.5 to A.6.2.9(5)
Definition, 3.3.3, A.3.3.3
Hydrants, 7.1.1.2
Operating test, 10.10.2.4.3
Supervision of, 6.7.2, A.6.7.2
Copper
Joints, 10.3.6
Pipe and tubing, Table 10.1.1.1, 10.3.6
Corrosion protection, 10.4.1, 10.6.2.5, 12.2.4, A.10.4.1.3, A.10.6.2.5
Corrosion-resistant piping, 12.2.4
Definition, 3.3.4
Corrosion-retarding material, 10.4.1.1, 10.6.2.5, A.10.6.2.5
Definition, 3.3.5
Couplings, 5.9.2, 10.6.2.4, A.10.3.5.3

-D-

Damage, protection against, *see also* Corrosion protection
Aboveground pipe, 10.4.2.1.4, 12.2
Hydrants, 7.3.5
Underground pipe, 10.4, A.10.4.1.3 to A.10.4.3.2.3
Dead-end mains, A.5.1, A.10.10.2.1
Definitions, Chap. 3
Drains
Automatic drain valve (automatic drip or ball), 5.9.4
Definition, 3.3.2
Hydrants, 7.3.2, 10.10.2.4.2, A.7.3.1, A.7.3.2.1.1
Dry barrel (frostproof) hydrants, *see* Hydrants

-E-

Earthquakes, protection from, 12.2.5
Equivalency to standard, 1.4

-F-

Fire department connections, 4.1.3(10), 7.1.3, 10.1.1.3
Definition, 3.3.6
Remote, 5.9, A.5.9
Fire protection system supply mains, 13.3
Fire pumps, 5.6, 5.9.5.6, 6.2.3, 10.10.2.4.4, A.5.4, A.5.6, A.10.1.2, A.10.10.2.1.3
Definition, 3.3.7
Fittings, pipe, 4.1.4, 10.2, 10.8.1, 10.8.3 to 10.8.5, 10.8.7, 10.8.10, A.10.3.5.3
Flow tests
Backflow prevention assemblies, 10.10.2.5
Hydrants, Annex C
Public water supply, 5.1.2, A.5.1.2
Flushing of pipe, 10.10.2.1, A.10.10.2.1
Foam systems, 1.1.1(4), 5.2.2(1)(d), 13.2(1)(d)
Freezing, protection from, 10.4.2.1, 10.4.3.2.4.1, 12.2.3, A.10.4.2.1.1
Frostproof hydrants, *see* Hydrants, Dry barrel

-G-

Gate valves, 4.1.3(9)(a), 6.1.1.1, 6.1.1.3, 6.1.1.4, 6.2.9(5), 6.7.3, 7.1.1.2.1, 7.1.1.4, A.6.1.1.3, A.6.1.14, A.6.2.9(5)
Gravity tanks, *see* Tanks, water
Grooved connections, 10.3.5, A.10.3.5.3

Grounding, 10.5, A.10.5.1

-H-

Hazardous areas, protection from, 12.2.1, 12.2.2
Heat tracing, 10.4.2.1.7
Hose, 7.3.3, Chap. 8, A.7.3.3
Connections, 8.1.4
Domestic use prohibited, 8.7
Tests, A.8.1.1, A.8.6.1
Types, A.8.1.3
Hose houses, 1.1.1(7), 4.1.3(9)(c), 8.1.2.1
Construction, 8.3
Definition, 3.3.8
Equipment, 8.6, A.8.6.1
Hydrants within, 8.2.2
Location, 8.2.1
Marking, 8.5
Size and arrangement, 7.3.3.2, 8.4, A.8.4
Hose reels or carriers, 8.1.2.1, 8.2.3
Hydrant butts, C.4.5.5, C.4.6.1
Definition, 3.3.9
Hydrants, Chap. 7; *see also* Hose
Definition, 3.4.1
Domestic use prohibited, 8.7
Drainage, 7.3.2, 10.10.2.4.2, A.7.3.1, A.7.3.2.1.1
Dry barrel (frostproof), 10.10.2.4.2, C.4.6.8
Definition, 3.4.1.1, A.3.4.1.1
Flow (definition), 3.4.1.2
Flow testing, Annex C
Flush hydrants, marking of, D.5.4
Hose for, *see* Hose
In hose houses, 8.2.2
Hydrostatic testing of pipe, gauges for, 10.10.2.2.3
Installation, 7.3, 10.8.1, 10.8.3 to 10.8.5, 10.8.7, A.7.3.1 to A.7.3.3
Mains serving, size of, 13.1
Marking of, C.4.1.1, Annex D
Operating tests, 10.10.2.4.2
Permanently inoperative, marking of, D.5.2
Private, 1.1.1(5), Figs. A.8.4(a) to (c)
Definition, 3.4.1.3, A.3.4.1.3
Marking, D.5.5
Public, 7.2.2, A.7.2.1
Definition, 3.4.1.4
Marking, D.5.1
Testing and flushing, C.4.13
Rated capacity, *see* Rated capacity
Residual, 4.1.3(9)(d), C.4.3.3, C.4.3.4, C.4.3.6, C.4.5.1
Definition, 3.4.1.5
Temporarily inoperative, marking of, D.5.3
Tests, fire flow, Annex C
Valves, 7.1.1.2 to 7.1.1.4, 7.3.6, A.7.1.1.3
Wall, 7.2.4, A.7.2.3
Wet barrel, C.4.6.9
Definition, 3.4.1.6
Working plans, 4.1.3(9)
Hydraulically calculated water demand flow rate, 5.2.1, 5.2.2(2), Chap. 11, 13.2(2)
Definition, 3.3.10
Hydrostatic tests, 10.10.2.2, 10.10.2.3, A.10.10.2.2.1 to A.10.10.2.2.6, A.10.10.2.3
Definition, 3.3.16.3

-I-

Identification
Hose houses, 8.5
Hydrants, 7.1.1.2.2.1, Annex D
Valves, 6.7.1, B.4
Indicating valves, 4.1.3(8)(g), 6.1.1, 6.1.2, 6.2.5, 6.2.6(1), 6.2.7(2), 6.2.9, 6.3, A.6.1.1.3, A.6.1.1.4, A.6.2.5, A.6.2.9(1) to A.6.2.9(5)
Definition, 3.3.17.2, A.3.3.17.2
Inspections, 14.1
Installation work, 4.2
Authority having jurisdiction, role of, 4.2.2
Performance of, 4.2.1
Instructions, installation
Backflow prevention assemblies, 6.5.1
Pipe and fittings, 4.1.4, 10.1.1.2.1, 10.1.1.2.2, 10.2.1.2.1, 10.2.1.2.2, 10.3.3, 10.8.2, 10.8.10, 10.9.6, A.10.6.2
Working plans, 4.1.4
Iron
Fittings, Table 10.2.1.1
Pipe, Table 10.1.1.1, A.10.1.1, Table A.10.1.3, A.10.3.1, A.10.4.1.3

-J-

Joints, pipe, 10.3, 10.4.1.1, 10.4.1.3, 10.4.3.2.2.2, 10.6.2, 10.8.2, A.10.3.1, A.10.3.5.3, A.10.4.1.3, A.10.6.2

-L-

Labeled (definition), 3.2.3
Lakes, 5.8, A.5.4, A.5.9
Listed (definition), 3.2.4, A.3.2.4, C.3.2.2, D.3.2.2

-M-

Maintenance, 14.1
Master streams, Chap. 9
Measurement, units of, 1.5, 11.1, 11.2, A.11.1, C.1.4, D.1.4
Meters, 5.3.2

-N-

Nozzles
Gear control, A.9.1
Monitor, 1.1.1(6), 4.1.3(7), 9.1, A.9.1
Sizes of, 8.6.2

-O-

Operating tests, 10.10.2.4

-P-

Penstocks, 5.8
Pipe
Aboveground, 10.4.2.1.4, Chap. 12, Chap. 13
Buried, *see* Underground pipe
Fire protection system supply mains, 13.3
Fittings, *see* Fittings, pipe

Flushing, 10.10.2.1, A.10.10.2.1
Hydrant fire flow tests and, C.4.1.5, C.4.3.7
Instructions, installation, *see* Instructions, installation
Joints, *see* Joints, pipe
Protection of, 12.2
Sizes, Chap. 13
Testing, 10.10, A.10.10.2.1 to A.10.10.2.3
Water crossed by, 6.6.2(1), 10.4.2.1.5
Pits, valves in, 4.1.3(8)(g), 6.2.7(1), 6.4, Fig. A.5.9(b), A.6.2.7(1)
Plans, 4.1, A.4.1
Plastic pipe, Table 10.1.1.1, 10.8.10, A.10.1.1, A.10.4.1.3
Plug straps, 10.6.2.3, 10.6.2.4
Post indicator valves, 6.1.1.1, 6.2.5(2), 6.2.7(2), 6.2.9, 6.3, A.6.2.9(1) to A.6.2.9(5)
Pressure-regulating devices, 5.3.1
Definition, 3.3.12, A.3.3.12
Pressure tanks, 6.2.4
Private fire hydrants, *see* Hydrants
Private fire service mains (definition), 3.3.13, A.3.3.13
Proprietary supervisory service systems, B.3
Public hydrants, *see* Hydrants
Public water systems, A.5.1, A.5.4
Connections to, 4.1.3(8)(f), 5.1, 5.5, A.5.1, A.5.4
Cross-contamination, 5.4.2, A.5.4, A.5.4.2.1
Flow tests, 5.1.2, A.5.1.2
Pumper outlets, C.4.6.1, C.4.8
Definition, 3.3.14
Pumpers, fire department, A.7.2.1
Pumps
Connections, 6.2.7, A.6.2.7(1)
Fire, *see* Fire pumps
Purpose of standard, 1.2

-R-

Rated capacity
Definition, 3.3.15, C.3.3.1, D.3.3.1
Hydrants classified in accordance with, D.4
References, Chap. 2, C.2, D.2, Annex E
Regulators, 4.1.3(8)(g)
Remote fire department connections, 5.9.5, A.5.9.5.1 to A.5.9.5.3(2)
Reservoirs, 5.8, A.5.9
Residual hydrants, *see* Hydrants
Residual pressure, C.4.1.1, C.4.1.3, C.4.1.5, C.4.1.6, C.4.3.3, C.4.5.8, C.4.10.1.2
Definition, 3.3.11.1, C.3.3.2
Restraints, 4.1.3(8)(i), 10.6, 10.7.1, A.10.6
Retroactivity of standard, 1.3
Rivers, 5.8, A.5.4, A.5.9
Rod couplings, 10.6.2.4
Rods, 10.6.2.1.2, 10.6.2.4, 10.6.2.5, A.10.6.2.5

-S-

Scope of standard, 1.1
Screens, water, 5.8
Screw threads, 5.9.2.1 to 5.9.2.3, 7.1.2, 8.1.4.1, 10.3.4
Sectional valves, 6.6, A.6.6.1
Security of valves, 6.7, A.6.7.2
Shall (definition), 3.2.5
Should (definition), 3.2.6, C.3.2.3, D.3.2.3
Shutoff valves, *see* Control valves (shutoff valves)
Size of mains, 5.2
Sprinkler systems, 1.1.1, 5.2.2(1), 12.2.2, 13.2(1)
Sprinkler systems, mains serving, 1.1.4, 1.1.5
Standard (definition), 3.2.7
Standpipe and hose systems, 1.1.1(6), 4.1.3(7), 5.2.2(1)(e), 13.2(1)(e)
Static pressure, C.4.1.1, C.4.1.2, C.4.3.3, C.4.5.4
Definition, 3.3.11.2, C.3.3.3
Steel
Pipe, Table 10.1.1.1, 10.1.1.3, Table 10.1.1.3, A.10.3.1
Strainers, water, 5.8
Straps
Plug, 10.6.2.3, 10.6.2.4
Restraint, 10.6.2.2, 10.6.2.4
Supervision, valve, 6.7.2, 6.7.3, A.6.7.2, Annex B

-T-

Tanks, water, 5.7
Gravity, 6.2.4 to 6.2.6, A.6.2.5, A.6.2.6
Pressure, 6.2.4
Tees, 10.6.2.2
Tests, 14.1; *see also* Hydrostatic tests
Backflow prevention assemblies, 10.10.2.5
Flow
Definition, 3.3.16.1
Hydrant, Annex C
Public water supply, 5.1.2
Flushing (definition), 3.3.16.2
Hose, A.8.1.1, A.8.6.1
Underground pipe, 10.10, A.10.10.2.1 to A.10.10.2.3
Hydrostatic test, 10.10.2.2, 10.10.2.3, A.10.10.2.2.1 to A.10.10.2.2.6, A.10.10.2.3
Operating test, 10.10.2.4
Valves, 10.10.2.4.3
Threads, screw, *see* Screw threads
Thrust blocks, 10.6.1, A.10.6.1

-U-

Underground pipe, Chap. 10, A.4.1; *see also* Fittings, pipe; Joints, pipe
Backfilling, 10.9, A.10.9.3
Under buildings, 6.6.2(2), 10.4.3, A.10.4.3.1 to A.10.4.3.2.3
Connection of pipe, fittings, and appurtenances, 10.3, A.10.3.1, A.10.3.5.3
Extension into building, 10.1.4, A.10.1.4
Grounding and bonding, 10.5, A.10.5.1
Installation requirements, 10.8
Lining, 10.1.3, A.10.1.3, Table A.10.1.3
Materials, Table 10.1.1.1, A.10.1, A.10.1.1
Protection, 10.4, A.10.4.1.3 to A.10.4.3.2.3
Under railroads, 10.4.2.2.4
Restraints, 10.6, 10.7.1, A.10.6
Serving sprinkler systems, 1.1.4, 1.1.5
Sizes, Chap. 13
Steep grades, 10.7

Testing and acceptance, 10.10, A.10.10.2.1 to A.10.10.2.3
Units of measurement, 1.5, 11.1, 11.2, A.11.1, C.1.4, D.1.4

-V-

Valves, 4.1.3(8)(g), Chap. 6; *see also* Check valves; Control valves (shutoff valves); Indicating valves; Post indicator valves
Check, 10.1.1.3
Definition, 3.3.17.1
Corrosion protection, 10.4.1.2
Hydrants, 7.1.1.2 to 7.1.1.4, 7.3.6, A.7.1.1.3
Identification, 6.7.1, B.4
Installation requirements, 10.8.1, 10.8.3 to 10.8.5, 10.8.7, 10.8.10
Locking, B.4
Operating tests, 10.10.2.4.3
Piping under buildings, 10.4.3.2.3, A.10.4.3.2.3
Sealing, B.4
Supervision, 6.7.3, Annex B
Types, 6.1, A.6.1.1.3, A.6.1.1.4

-W-

Washers, 10.6.2.1.4, 10.6.2.4, 10.6.2.5, A.10.6.2.5
Water meters, 4.1.3(8)(g)
Water spray systems, 1.1.1(3), 5.2.2(1)(c), 13.2(1)(c)
Water supplies, Chap. 5
Contamination, protection against, 5.4.2, A.5.4.2.1
Hydrant fire flow tests and, C.4.1.5
Penstocks, rivers, lakes or reservoirs, 5.8, A.5.4, A.5.9
Pipe sizes and, 13.3
Public (waterworks) systems, *see* Public water systems
Sprinkler systems, 5.2.2(1)
Valves controlling, *see* Control valves
Wall hydrants, A.7.2.3
Working plans, 4.1.3(6)
Water utilities, 1.1.3
Waterworks systems, *see* Public water systems
Wet barrel hydrants, C.4.6.9
Definition, 3.4.1.6

Sequence of Events for the Standards Development Process

Once the current edition is published, a Standard is opened for Public Input.

Step 1 – Input Stage

- Input accepted from the public or other committees for consideration to develop the First Draft
- Technical Committee holds First Draft Meeting to revise Standard (23 weeks); Technical Committee(s) with Correlating Committee (10 weeks)
- Technical Committee ballots on First Draft (12 weeks); Technical Committee(s) with Correlating Committee (11 weeks)
- Correlating Committee First Draft Meeting (9 weeks)
- Correlating Committee ballots on First Draft (5 weeks)
- First Draft Report posted on the document information page

Step 2 – Comment Stage

- Public Comments accepted on First Draft (10 weeks) following posting of First Draft Report
- If Standard does not receive Public Comments and the Technical Committee chooses not to hold a Second Draft meeting, the Standard becomes a Consent Standard and is sent directly to the Standards Council for issuance (see Step 4) or
- Technical Committee holds Second Draft Meeting (21 weeks); Technical Committee(s) with Correlating Committee (7 weeks)
- Technical Committee ballots on Second Draft (11 weeks); Technical Committee(s) with Correlating Committee (10 weeks)
- Correlating Committee Second Draft Meeting (9 weeks)
- Correlating Committee ballots on Second Draft (8 weeks)
- Second Draft Report posted on the document information page

Step 3 – NFPA Technical Meeting

- Notice of Intent to Make a Motion (NITMAM) accepted (5 weeks) following the posting of Second Draft Report
- NITMAMs are reviewed and valid motions are certified by the Motions Committee for presentation at the NFPA Technical Meeting
- NFPA membership meets each June at the NFPA Technical Meeting to act on Standards with "Certified Amending Motions" (certified NITMAMs)
- Committee(s) vote on any successful amendments to the Technical Committee Reports made by the NFPA membership at the NFPA Technical Meeting

Step 4 – Council Appeals and Issuance of Standard

- Notification of intent to file an appeal to the Standards Council on Technical Meeting action must be filed within 20 days of the NFPA Technical Meeting
- Standards Council decides, based on all evidence, whether to issue the standard or to take other action

Notes:

1. Time periods are approximate; refer to published schedules for actual dates.
2. Annual revision cycle documents with certified amending motions take approximately 101 weeks to complete.
3. Fall revision cycle documents receiving certified amending motions take approximately 141 weeks to complete.

Committee Membership Classifications[1,2,3,4]

The following classifications apply to Committee members and represent their principal interest in the activity of the Committee.

1. M *Manufacturer:* A representative of a maker or marketer of a product, assembly, or system, or portion thereof, that is affected by the standard.
2. U *User:* A representative of an entity that is subject to the provisions of the standard or that voluntarily uses the standard.
3. IM *Installer/Maintainer:* A representative of an entity that is in the business of installing or maintaining a product, assembly, or system affected by the standard.
4. L *Labor:* A labor representative or employee concerned with safety in the workplace.
5. RT *Applied Research/Testing Laboratory:* A representative of an independent testing laboratory or independent applied research organization that promulgates and/or enforces standards.
6. E *Enforcing Authority:* A representative of an agency or an organization that promulgates and/or enforces standards.
7. I *Insurance:* A representative of an insurance company, broker, agent, bureau, or inspection agency.
8. C *Consumer:* A person who is or represents the ultimate purchaser of a product, system, or service affected by the standard, but who is not included in (2).
9. SE *Special Expert:* A person not representing (1) through (8) and who has special expertise in the scope of the standard or portion thereof.

NOTE 1: "Standard" connotes code, standard, recommended practice, or guide.

NOTE 2: A representative includes an employee.

NOTE 3: While these classifications will be used by the Standards Council to achieve a balance for Technical Committees, the Standards Council may determine that new classifications of member or unique interests need representation in order to foster the best possible Committee deliberations on any project. In this connection, the Standards Council may make such appointments as it deems appropriate in the public interest, such as the classification of "Utilities" in the National Electrical Code Committee.

NOTE 4: Representatives of subsidiaries of any group are generally considered to have the same classification as the parent organization.

Submitting Public Input / Public Comment Through the Online Submission System

Soon after the current edition is published, a Standard is open for Public Input.

Before accessing the Online Submission System, you must first sign in at www.nfpa.org. *Note: You will be asked to sign-in or create a free online account with NFPA before using this system:*

a. Click on Sign In at the upper right side of the page.
b. Under the Codes and Standards heading, click on the "List of NFPA Codes & Standards," and then select your document from the list or use one of the search features.

OR

a. Go directly to your specific document information page by typing the convenient shortcut link of www.nfpa.org/document# (Example: NFPA 921 would be www.nfpa.org/921). Sign in at the upper right side of the page.

To begin your Public Input, select the link "The next edition of this standard is now open for Public Input" located on the About tab, Current & Prior Editions tab, and the Next Edition tab. Alternatively, the Next Edition tab includes a link to Submit Public Input online.

At this point, the NFPA Standards Development Site will open showing details for the document you have selected. This "Document Home" page site includes an explanatory introduction, information on the current document phase and closing date, a left-hand navigation panel that includes useful links, a document Table of Contents, and icons at the top you can click for Help when using the site. The Help icons and navigation panel will be visible except when you are actually in the process of creating a Public Input.

Once the First Draft Report becomes available there is a Public Comment period during which anyone may submit a Public Comment on the First Draft. Any objections or further related changes to the content of the First Draft must be submitted at the Comment stage.

To submit a Public Comment you may access the online submission system utilizing the same steps as previously explained for the submission of Public Input.

For further information on submitting public input and public comments, go to: http://www.nfpa.org/publicinput.

Other Resources Available on the Document Information Pages

About tab: View general document and subject-related information.

Current & Prior Editions tab: Research current and previous edition information on a Standard.

Next Edition tab: Follow the committee's progress in the processing of a Standard in its next revision cycle.

Technical Committee tab: View current committee member rosters or apply to a committee.

Technical Questions tab: For members and Public Sector Officials/AHJs to submit questions about codes and standards to NFPA staff. Our Technical Questions Service provides a convenient way to receive timely and consistent technical assistance when you need to know more about NFPA codes and standards relevant to your work. Responses are provided by NFPA staff on an informal basis.

Products & Training tab: List of NFPA's publications and training available for purchase.

Information on the NFPA Standards Development Process

I. Applicable Regulations. The primary rules governing the processing of NFPA standards (codes, standards, recommended practices, and guides) are the NFPA *Regulations Governing the Development of NFPA Standards (Regs)*. Other applicable rules include NFPA *Bylaws*, NFPA *Technical Meeting Convention Rules*, NFPA *Guide for the Conduct of Participants in the NFPA Standards Development Process*, and the NFPA *Regulations Governing Petitions to the Board of Directors from Decisions of the Standards Council*. Most of these rules and regulations are contained in the *NFPA Standards Directory*. For copies of the *Directory*, contact Codes and Standards Administration at NFPA Headquarters; all these documents are also available on the NFPA website at "www.nfpa.org."

The following is general information on the NFPA process. All participants, however, should refer to the actual rules and regulations for a full understanding of this process and for the criteria that govern participation.

II. Technical Committee Report. The Technical Committee Report is defined as "the Report of the responsible Committee(s), in accordance with the Regulations, in preparation of a new or revised NFPA Standard." The Technical Committee Report is in two parts and consists of the First Draft Report and the Second Draft Report. (See *Regs* at Section 1.4.)

III. Step 1: First Draft Report. The First Draft Report is defined as "Part one of the Technical Committee Report, which documents the Input Stage." The First Draft Report consists of the First Draft, Public Input, Committee Input, Committee and Correlating Committee Statements, Correlating Notes, and Ballot Statements. (See *Regs* at 4.2.5.2 and Section 4.3.) Any objection to an action in the First Draft Report must be raised through the filing of an appropriate Comment for consideration in the Second Draft Report or the objection will be considered resolved. [See *Regs* at 4.3.1(b).]

IV. Step 2: Second Draft Report. The Second Draft Report is defined as "Part two of the Technical Committee Report, which documents the Comment Stage." The Second Draft Report consists of the Second Draft, Public Comments with corresponding Committee Actions and Committee Statements, Correlating Notes and their respective Committee Statements, Committee Comments, Correlating Revisions, and Ballot Statements. (See *Regs* at 4.2.5.2 and Section 4.4.) The First Draft Report and the Second Draft Report together constitute the Technical Committee Report. Any outstanding objection following the Second Draft Report must be raised through an appropriate Amending Motion at the NFPA Technical Meeting or the objection will be considered resolved. [See *Regs* at 4.4.1(b).]

V. Step 3a: Action at NFPA Technical Meeting. Following the publication of the Second Draft Report, there is a period during which those wishing to make proper Amending Motions on the Technical Committee Reports must signal their intention by submitting a Notice of Intent to Make a Motion (NITMAM). (See *Regs* at 4.5.2.) Standards that receive notice of proper Amending Motions (Certified Amending Motions) will be presented for action at the annual June NFPA Technical Meeting. At the meeting, the NFPA membership can consider and act on these Certified Amending Motions as well as Follow-up Amending Motions, that is, motions that become necessary as a result of a previous successful Amending Motion. (See 4.5.3.2 through 4.5.3.6 and Table 1, Columns 1-3 of *Regs* for a summary of the available Amending Motions and who may make them.) Any outstanding objection following action at an NFPA Technical Meeting (and any further Technical Committee consideration following successful Amending Motions, see *Regs* at 4.5.3.7 through 4.6.5.3) must be raised through an appeal to the Standards Council or it will be considered to be resolved.

VI. Step 3b: Documents Forwarded Directly to the Council. Where no NITMAM is received and certified in accordance with the Technical Meeting Convention Rules, the standard is forwarded directly to the Standards Council for action on issuance. Objections are deemed to be resolved for these documents. (See *Regs* at 4.5.2.5.)

VII. Step 4a: Council Appeals. Anyone can appeal to the Standards Council concerning procedural or substantive matters related to the development, content, or issuance of any document of the NFPA or on matters within the purview of the authority of the Council, as established by the Bylaws and as determined by the Board of Directors. Such appeals must be in written form and filed with the Secretary of the Standards Council (see *Regs* at Section 1.6). Time constraints for filing an appeal must be in accordance with 1.6.2 of the *Regs*. Objections are deemed to be resolved if not pursued at this level.

VIII. Step 4b: Document Issuance. The Standards Council is the issuer of all documents (see Article 8 of *Bylaws*). The Council acts on the issuance of a document presented for action at an NFPA Technical Meeting within 75 days from the date of the recommendation from the NFPA Technical Meeting, unless this period is extended by the Council (see *Regs* at 4.7.2). For documents forwarded directly to the Standards Council, the Council acts on the issuance of the document at its next scheduled meeting, or at such other meeting as the Council may determine (see *Regs* at 4.5.2.5 and 4.7.4).

IX. Petitions to the Board of Directors. The Standards Council has been delegated the responsibility for the administration of the codes and standards development process and the issuance of documents. However, where extraordinary circumstances requiring the intervention of the Board of Directors exist, the Board of Directors may take any action necessary to fulfill its obligations to preserve the integrity of the codes and standards development process and to protect the interests of the NFPA. The rules for petitioning the Board of Directors can be found in the *Regulations Governing Petitions to the Board of Directors from Decisions of the Standards Council* and in Section 1.7 of the *Regs*.

X. For More Information. The program for the NFPA Technical Meeting (as well as the NFPA website as information becomes available) should be consulted for the date on which each report scheduled for consideration at the meeting will be presented. To view the First Draft Report and Second Draft Report as well as information on NFPA rules and for up-to-date information on schedules and deadlines for processing NFPA documents, check the NFPA website (www.nfpa.org/docinfo) or contact NFPA Codes & Standards Administration at (617) 984-7246.

Xchange™

The place to connect online with your fire, electrical, and life safety peers

Have a question about the code or standard you're reading now?

NFPA Xchange™ can help!

NFPA Xchange™ brings together over 30,000 professionals worldwide, asking and answering each other's questions, sharing ideas, and discussing the issues impacting your industry today.

NFPA Xchange™ is free to join and offers:

- A robust collection of previously asked and answered questions to search
- Access to thousands of peers for problem-solving and on-the-job advice
- NFPA blogs, white papers, and webinars in one convenient place

NFPA members also enjoy **Xchange™ Members Only**, the online space for technical questions* answered by NFPA staff, exclusive NFPA live events, and premier access to curated content.

Join NFPA Xchange™ TODAY!

www.nfpa.org/xchange

Xchange Today. Safer Tomorrow.

*For the full terms of use, please visit nfpa.org/standard_items/terms-of-use#xchange. NFPA® is a registered trademark of the National Fire Protection Association, Quincy, MA 02169.